You ***can*** take it with you.

INSTRUCTION & OPERATION MANUAL

20K - Fifth Wheel Hitch

DEALER/INSTALLER:

(1) Provide this Manual to end user.
(2) Physically demonstrate hitching and unhitching procedures in this Manual to end user.
(3) Have end user demonstrate that he/she understands procedures.

END USER:

(1) Read and follow this Manual every time you use hitch.
(2) Save this Manual and Hitch Warning Hang Tag for future reference.
(3) Pass on copies of Manual and Hitch Warning Hang Tag to any other user or owner of hitch.
(4) Never remove hitch warning decals as shown on the cover of this manual. If damaged, contact Cequent Performance Products (1-800-632-3290) for free replacement.

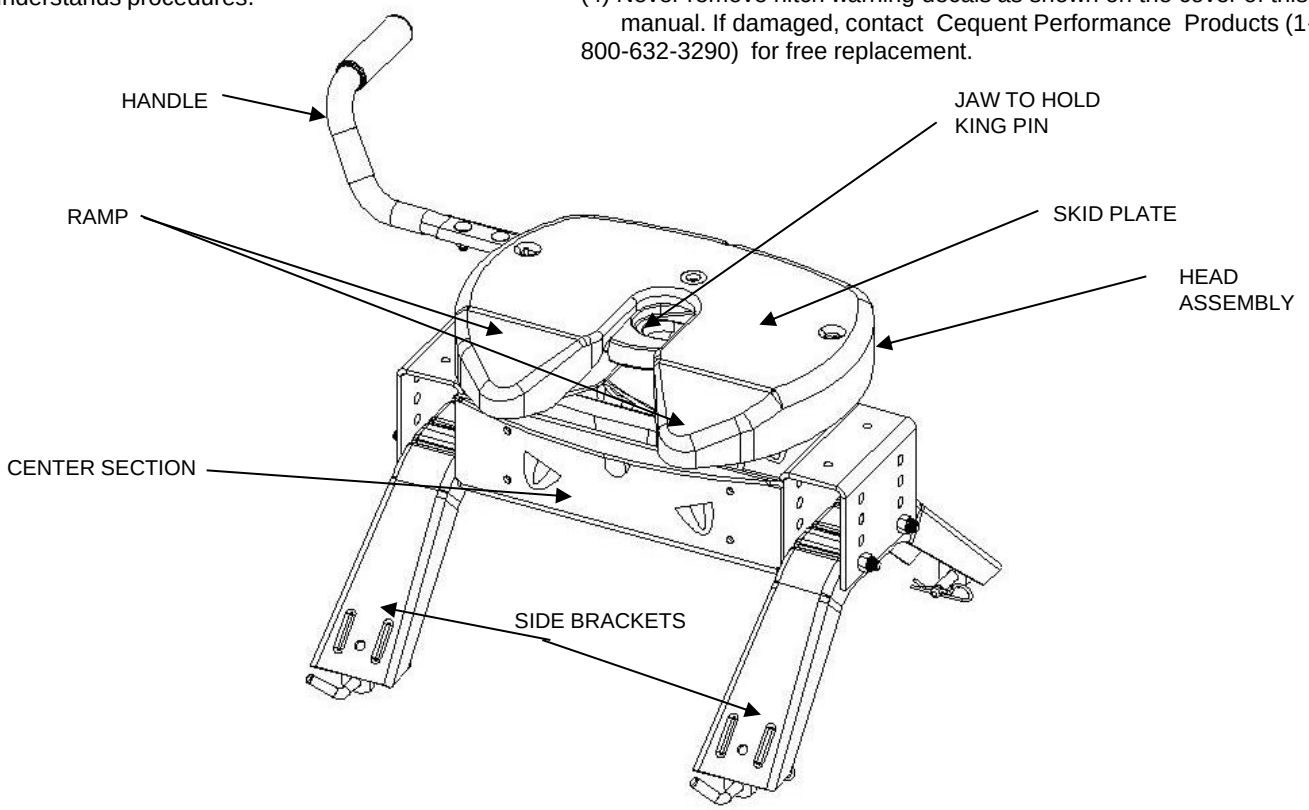

⚠ WARNING:
Failure to follow all of these instructions may result in death or serious injury

INDEX

1. ASSEMBLY INSTRUCTIONS
2. BEFORE EACH TRIP P. 2
3. HITCHING PROCEDURE P. 3
4. PULL TEST P. 6
5. UNHITCHING PROCEDURE P. 6
6. MAINTENANCE P. 7
7. LIMITED LIFETIME WARRANTY P. 9
8. APPENDIX A (Guidelines for matching hitch, truck, and trailer) P. 10
9. APPENDIX B (Guideline for center section orientation) P. 14

For Installation Assistance or Technical Help, Call 1-888-521-0510

30081N-2 05/29/14 REV J PCN3723 ©2011, 2014 CEQUENT PERFORMANCE PRODUCTS, INC PRINTED IN MEXICO
FOR KITS: 30081, 40261 & 50181

⚠ WARNING:

Do Not use this hitch for towing a trailer with a pin box that could come into contact with or interfere with the latch for the hitch handle when turning! (See Fig. A) If the pin box contacts the hitch handle or its latch when turning, the trailer may become unhitched.

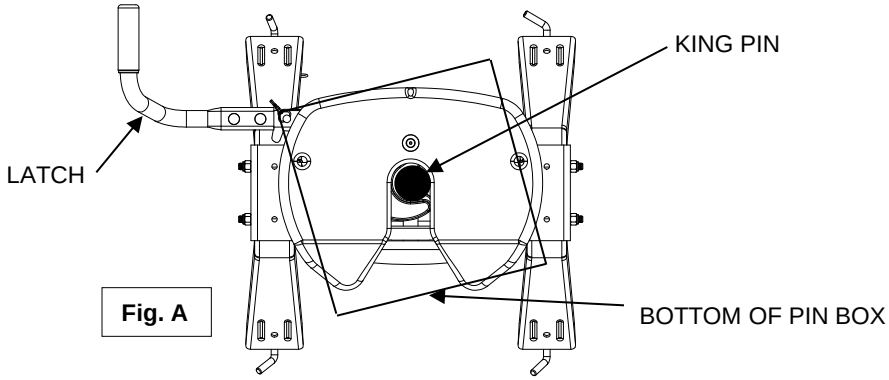

Fig. A

ASSEMBLY INSTRUCTIONS

⚠ WARNING:

- **Connection for trailer wiring should be in the side of the truck bed between the driver's seat and the wheel well for the back truck axle**
- **Installation of connection rearward of the wheel well may result in user placing body between truck and trailer. WHENEVER POSSIBLE, AVOID PUTTING BODY UNDER TRAILER OR BETWEEN TRUCK AND TRAILER!**
- **If you need to place any part of your body under trailer or between truck and trailer:**
  - **All trailer tires MUST be blocked in front and behind each tire AND**
  - **Trailer landing gear MUST be resting on firm ground AND**
  - **Truck MUST be stationary, in park, with emergency brake on!**

1. Reference Fig. 11 on page 8.

2. 5th Wheel Kit is contained in three cartons. Unpack and become familiar with parts on parts list. Base rails, brackets and hardware are in separate kit (part no. 30035) with separate Installation Instructions for Fifth Wheel Rail Mounting Kit.

3. Place two base rails across bed of truck (See Fig. B). Select one side bracket and place tabs through the centermost rectangular slot in the base rails. Slip long pull pins through holes in base rails. Repeat. Secure pull pins with spring retaining clips.

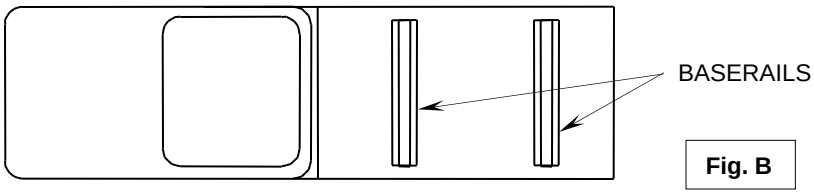

Fig. B

4. Select 20K Center Section and install on leg aligning holes for hitch height desired. (Lowest position 13" highest 17"). Install four 1/2-13 x 4.5" Hex bolts, (with heads toward inside as shown) and lock nuts. (See Appendix B for center section orientation)

5. Torque 1/2" nuts to 75 lb. ft.

6. Install base rails and mounting brackets as described in "Installation Instructions for 5th Wheel Rail Mounting Kit," Part # 30035.

⚠ WARNING

Base rails must be bolted through the floor of the pickup to the brackets that attach to the truck frame. DO NOT INSTALL BY FASTENING TO THE FLOOR OF THE PICKUP BOX ONLY. The floor alone is not strong enough to carry the loads imposed by the trailer.

 ©2011, 2014 CEQUENT PERFORMANCE PRODUCTS, INC

SUPPLEMENT TO 30095N

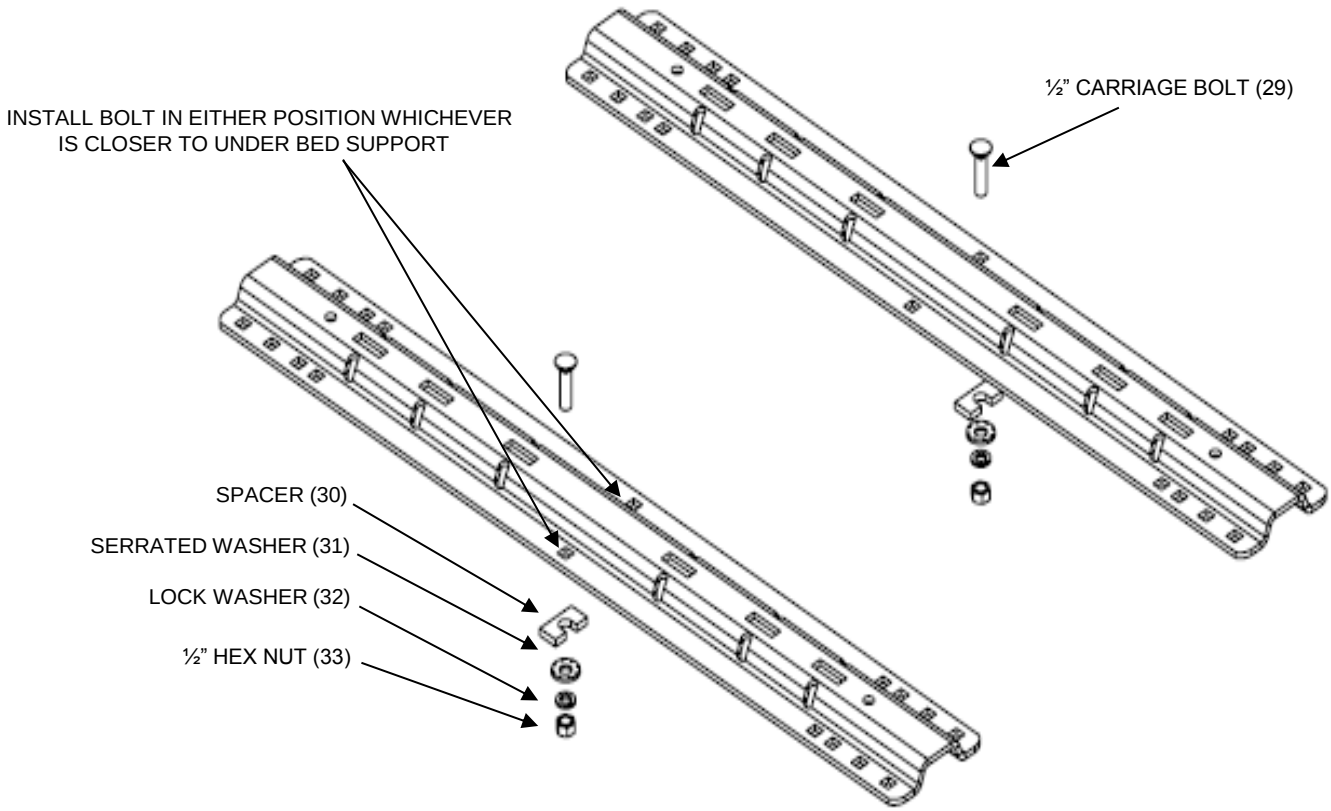

ADDITIONAL MOUNTING INSTRUCTIONS:

Install base rails as instructed in base rail instructions. The instruction below is for the addition of the 2 center bolts for applications using 30095.

1. Place base rails in accordance with base rail mounting instructions.
2. BEFORE DRILLING ANY HOLES, CHECK FOR CLEARANCE AROUND THE GAS TANK.
3. Using the center hole in the base rail as a guide, drill a ½" hole through the truck bed.
4. Insert ½" carriage bolt (29) into the hole. Install ½" serrated washer (31), ½" lock washer (32) and ½" nut (33).
5. Insert spacer (30) between the truck bed and the base rail. It will go in between at the corrugation of the bed. To keep bed from crushing when the bolt is tightened.
6. Repeat for the other base rail.
7. Torque the ½" nuts to 75 ft/lbs.

 ©2011, 2014 CEQUENT PERFORMANCE PRODUCTS, INC

GUIDELINES FOR MATCHING HITCH TRUCK AND TRAILER

If preparing to tow a 5th wheel trailer which you have not rating checked previously, please consult Appendix A of 5th Wheel Kit assembly instructions.

BEFORE EACH TRIP:

1. Lubricate skid plate surface of the hitch and pivot pin grease fitting (see Figure on cover of Manual) with automotive type chassis grease or use a plastic lube plate to provide a lubricated surface. Use lithium grease to lubricate pivot points of moving parts within the hitch.

2. Plastic lube plates (Performance Products No. 83001/40001) can be used to avoid messy grease. The plastic lube plate must not exceed 3/16 of an inch in thickness to ensure hitch will operate properly. **Lube plates must be 12 inches in diameter or larger to properly distribute king pin weight.**

3. Before each trip or maneuver, operate the handle and check that the jaw opens and closes freely.

4. See that all hitch pull pins (#7 (P/N 30434) & #12 (P/N 110974), Figure 11) are in place and the spring retaining clips (#4, Figure 11) are installed (Figure 1). Note that hitch pull pins used to attach the head assembly to the center section for the 5th Wheel Kit Hitch are 90 degree bent pins and if replacements are needed, please contact Customer Service at (800) 632-3290. Check that all four anchor assembly pins are pinned and have the retaining clips attached.

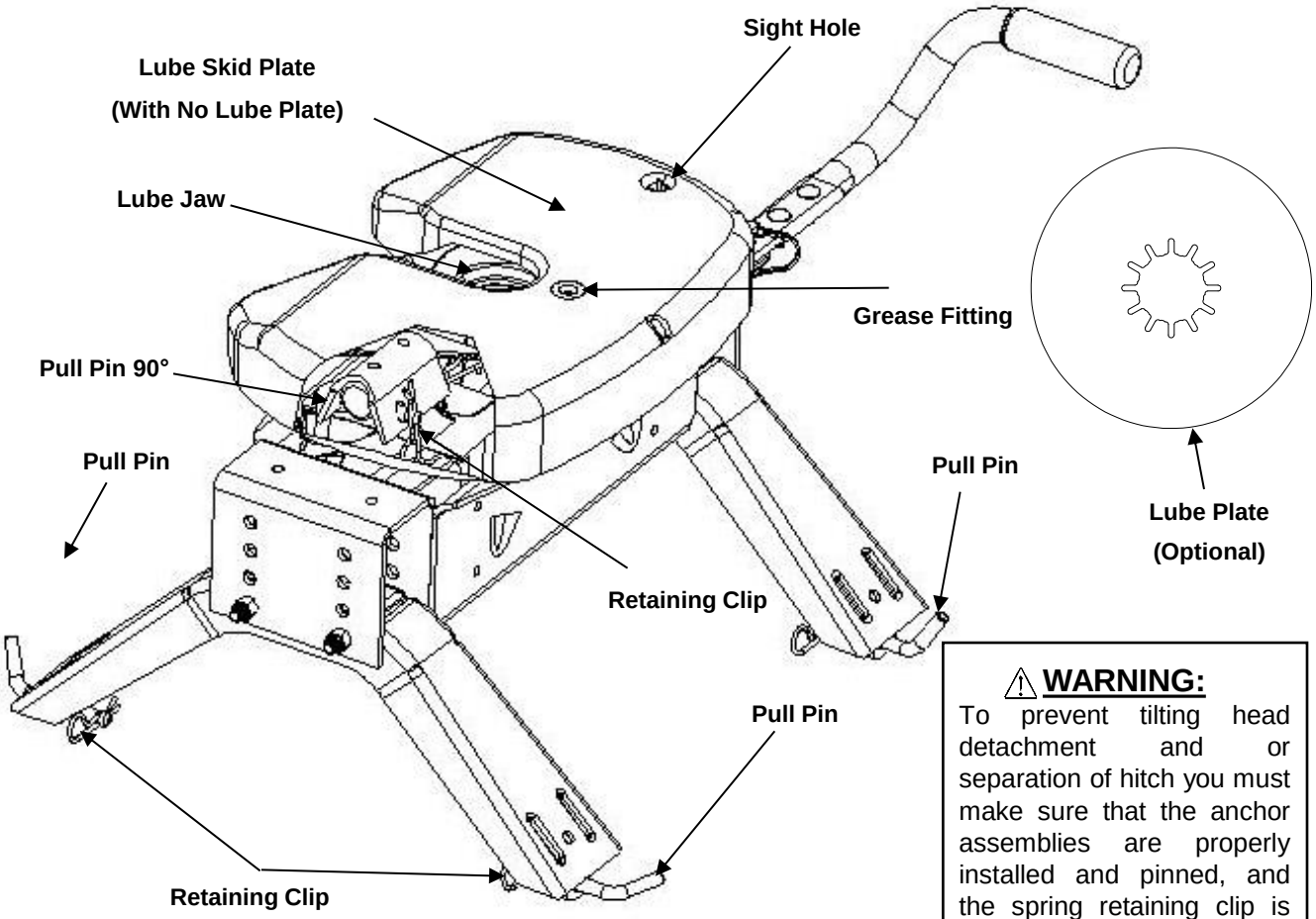

Figure 1 : Pin and Clip (Skid Plate cut away view)

⚠ WARNING:
To prevent tilting head detachment and or separation of hitch you must make sure that the anchor assemblies are properly installed and pinned, and the spring retaining clip is properly installed onto the ½" pull pin before towing. The spring retaining clip can easily be seen through the site holes in the top of the head.

 ©2011, 2014 CEQUENT PERFORMANCE PRODUCTS, INC

HITCHING PROCEDURE:

IMPORTANT: YOU ARE RESPONSIBLE FOR SAFE HITCHING AND UNHITCHING OPERATIONS. DO NOT RELY ON OTHERS TO PERFORM THESE DUTIES. YOU MUST PERSONALLY MAKE SURE THE FOLLOWING STEPS ARE PERFORMED IN THE FOLLOWING ORDER!

> ⚠ **WARNING:**
> **FAILURE TO FOLLOW THESE INSTRUCTIONS MAY RESULT IN DEATH OR SERIOUS INJURY.**

1. Place blocks (sometimes called "chocks") firmly against front and rear of each trailer wheel to prevent any possible forward or rearward motion. DO NOT REMOVE BLOCKS UNTIL EACH OF THE FOLLOWING STEPS AND THE PULL TEST HAVE BEEN COMPLETED. Lower tailgate if necessary. Clearance of the lowered tailgate to the trailer needs to be monitored during hookups as some manufacturer combinations of truck and trailer have little or no clearance.

2. Using trailer jacks, adjust trailer height following the directions in the trailer manual so that bottom of trailer pin box ("A" in Figure 2) is ½ to 1 inch below skid plate (See "B" in Figure 2). During the hitching maneuver, the bottom of the trailer pin box should come in contact with skid plate ramp ("C" in Figure 2).

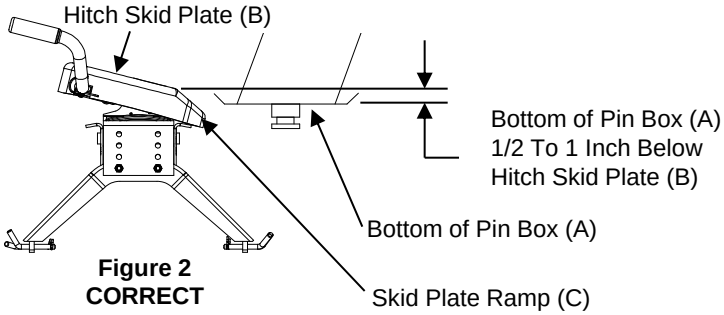

Figure 2
CORRECT

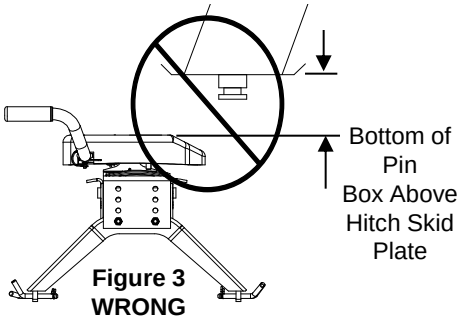

Figure 3
WRONG

> ⚠ **WARNING:**
> Failure to follow this instruction may result in king pin being too high and coming to rest on top of the closed jaw or not completely inside jaw. (See Figure 6 & 7). This could result in trailer separating from hitch. Trailer separation may result in death or serious injury if anyone is under the trailer or between truck and trailer when separation occurs.

3. Remove bail pin from bail pin hole (see Figure 4). Then pull handle out and rearward to hold open
   NOTE: Hitch jaw must be in the open position for king pin to enter the hitch.

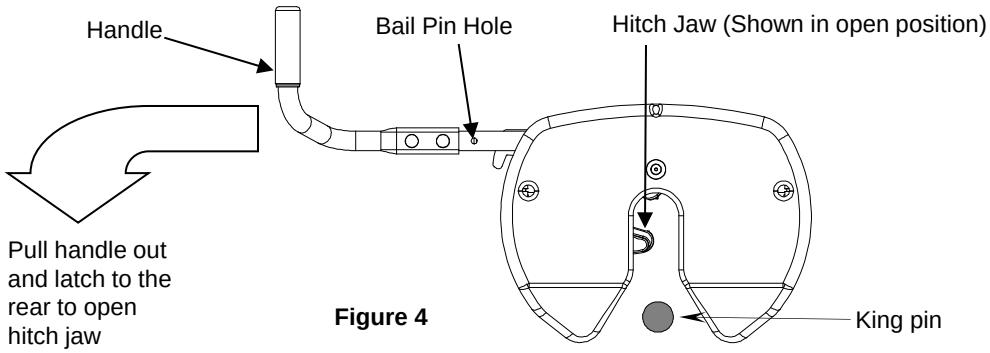

Figure 4

4. With handle in the open position (See Figure 4), back truck slowly into trailer. As king pin completely enters head, jaw will spring closed around king pin and handle will return to the closed position. If the handle does not return to the closed position, then try to push the handle back to the closed position. If handle does not return to the closed position then move the truck slightly forward or rearward until the handle returns to the closed position. (See Figure 5)

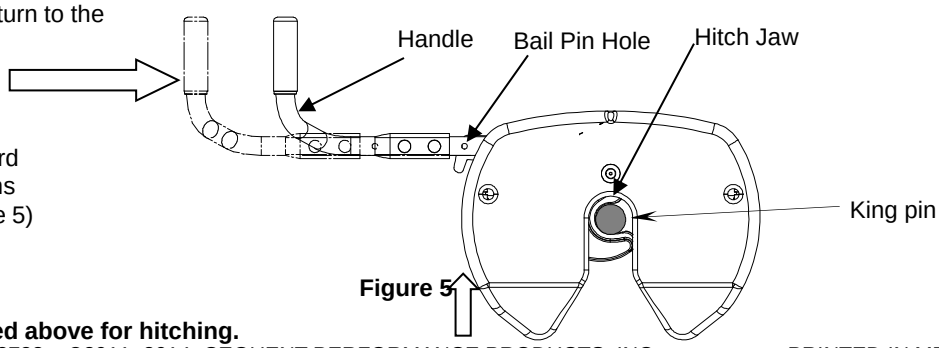

Figure 5

5. **Use only the method described above for hitching.**

6. With all trailer wheels still firmly blocked, landing gear still resting on firm ground and supporting trailer weight, and truck stationary and in park with emergency brake on: visually check that bottom of pin box is resting on top of the hitch. THERE SHOULD BE NO SPACE BETWEEN THESE SURFACES (see Figure 6). If space exists, (see Figure 7) trailer has not been properly hitched. DO NOT TOW! Instead, repeat above steps until trailer is properly hitched. DO NOT PLACE BODY UNDER TRAILER TO PERFORM THIS INSPECTION!

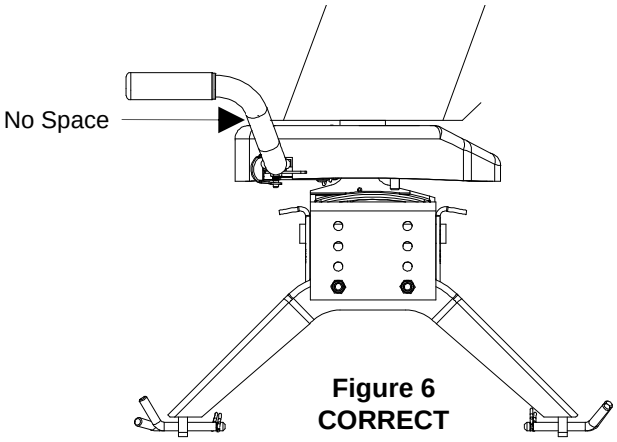

Figure 6
CORRECT

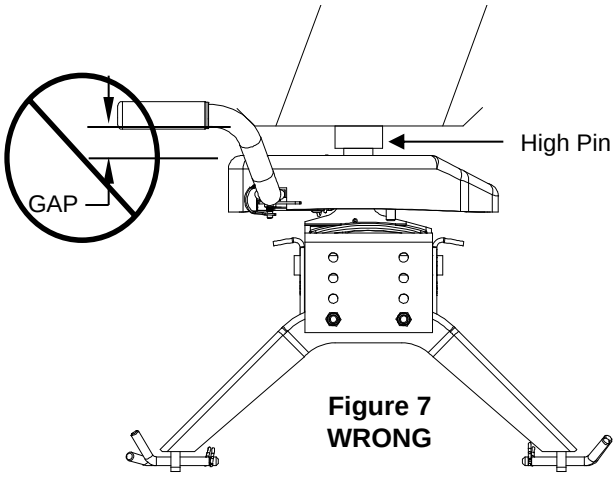

Figure 7
WRONG

7. Place bail pin through bail pin holes in the handle and the base plate to make sure the hitch jaw is locked closed. IF FLAG BLOCKS HOLE FOR BAIL PIN, TRAILER HAS NOT BEEN PROPERLY CONNECTED TO HITCH. DO NOT TOW! Repeat above steps until trailer is properly hitched. (see Figure 8)

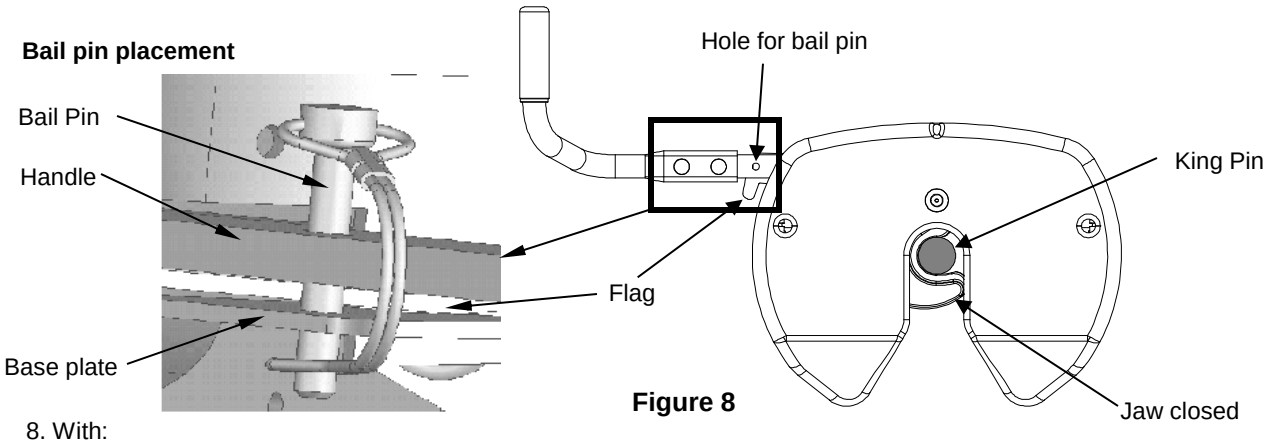

Figure 8

8. With:

- All trailer wheels still firmly blocked in front and behind each tire, and
- Truck stationary with the emergency brake on, and
- Trailer landing gear still resting on firm ground and supporting trailer weight; and

Connect electrical cable between truck and trailer, connect breakaway switch cable from pin box to a permanent part of truck, and raise tailgate of truck. Do not tow trailer until the Pull Test has been successfully completed.

 ©2011, 2014 CEQUENT PERFORMANCE PRODUCTS, INC

⚠ WARNING:

Do not attempt to hitch by using trailer jacks to lower trailer and king pin. This could result in king pin coming to rest on top of skid plate instead of within hitch opening where jaws are located. King pin could slide off hitch and trailer could drop, resulting in death or serious injury (see Figure 9).

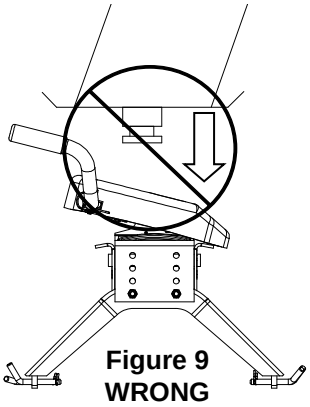

Figure 9
WRONG

⚠ WARNING:

•Connection for trailer wiring should be in the side of the truck bed between the driver's seat and the wheel well for the back truck axle

•Installation of connection rearward of the wheel well may result in user placing body between truck and trailer. WHENEVER POSSIBLE, AVOID PUTTING BODY UNDER TRAILER OR BETWEEN TRUCK AND TRAILER!

•If you need to place any part of your body under trailer or between truck and trailer:

- **All trailer tires MUST be blocked in front and behind each tire AND**
- **Trailer landing gear MUST be resting on firm ground AND**
- **Truck MUST be stationary, in park, with emergency brake on!**

PULL TEST

⚠ WARNING:

Failure to perform pull test may result in death or serious injury

1. With all trailer wheels still firmly blocked, and
2. Trailer landing gear still resting on firm ground and supporting trailer weight and,
3. Truck stationary and with emergency brake on:
4. Make sure no one is between truck and trailer, Return to cab of truck and release truck's emergency brake. Apply trailer brakes. Try to pull trailer slowly forward with the truck. If the trailer is properly hitched, the wheel blocks and trailer brakes should keep the truck from moving forward.

NOTE: If trailer is not properly hitched, trailer will separate from hitch and truck will move forward leaving trailer behind. If you followed all previous steps, the trailer will not drop or fall and you will easily be able to repeat the attachment steps.

⚠ WARNING:

Failure to keep wheels blocked and landing gear down could result in trailer suddenly moving or falling. This could result in death or serious injury!

5. After successfully performing above steps, fully raise trailer landing gear (see trailer manual).
6. Check and inspect all electrical circuits for proper operation. (Clearance lights, turn signals, stop lights, etc.).
7. Remove and store all trailer wheel blocks.

UNHITCHING PROCEDURE:

PERFORM THE FOLLOWING IN THIS ORDER:

1. Make sure truck is in park with emergency brake on.
2. Place blocks firmly against front and rear of each trailer wheel to prevent any possible forward or rearward motion.
3. Using trailer jacks, lower trailer landing gear following the directions in the Trailer Manual until feet of landing gear are resting on firm ground.

> ⚠ **WARNING:**
> Trailers that are not stable or properly hitched can fall and cause death or serious injury!
> To avoid death or serious injury:
> - All trailer tires MUST be blocked in front and behind each tire **AND**
> - Trailer landing gear MUST be resting on firm ground **AND**
> - Truck MUST be stationary, in park, with emergency brake on!

4. Lower truck tail gate.
5. Disconnect power cable and breakaway switch cable between truck and trailer.
6. Remove bail pin from hole in handle.
7. Pull hitch handle out completely until it latches in open position so that king pin is no longer securely grasped by hitch jaws (see Figure 4). Trailer is now free from hitch and truck. If handle does not pull out, there is probably pressure against the jaw. To relieve this pressure, back the truck slightly or pull the truck slightly forward. Reset truck emergency brake. Then pull hitch handle out completely until it latches in open position.
8. AFTER MAKING CERTAIN NO ONE IS STANDING BETWEEN TRUCK AND TRAILER OR IN FRONT OF TRUCK, drive truck slowly away from trailer.

> ⚠ **WARNING**
> Whenever possible, avoid putting body under trailer or between truck and trailer
> If you need to place any part of our body under trailer or between truck and trailer:
>
> - All trailer tires MUST be blocked in front and behind each tire **AND**
> - Trailer landing gear MUST be resting on firm ground **AND**
> - Truck MUST be stationary, in park, with emergency brake on!

9. Hitch jaw will automatically close as the king pin is removed from the jaw.
10. KEEP WHEEL BLOCKS IN PLACE. This will keep trailer from moving unexpectedly

MAINTENANCE:

1. Recheck tightness of all hardware every 1000 miles of use. All 1/2" bolts have a torque specification of 75ft.lbs.
2. See "Before each trip" section in this manual.
3. **Head assembly to center section should be lubed every 12 months with grease to keep assemblies moving freely.**

> ⚠ **WARNING:**
> Tilting 5th Wheel head can crush and cut. Keep hands and fingers clear from this area at all times (including placement/removal of head).

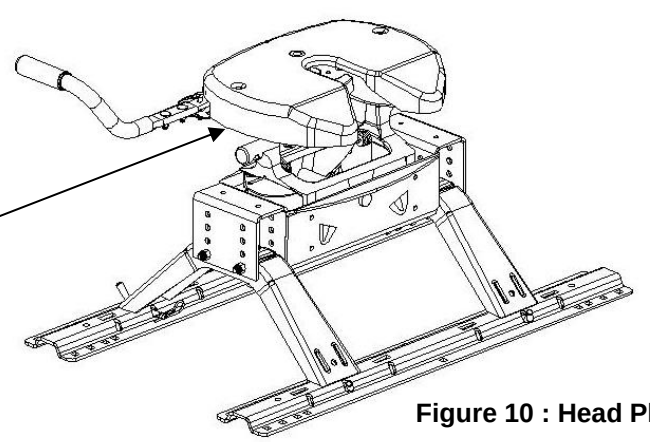

Figure 10 : Head Placement

 ©2011, 2014 CEQUENT PERFORMANCE PRODUCTS, INC

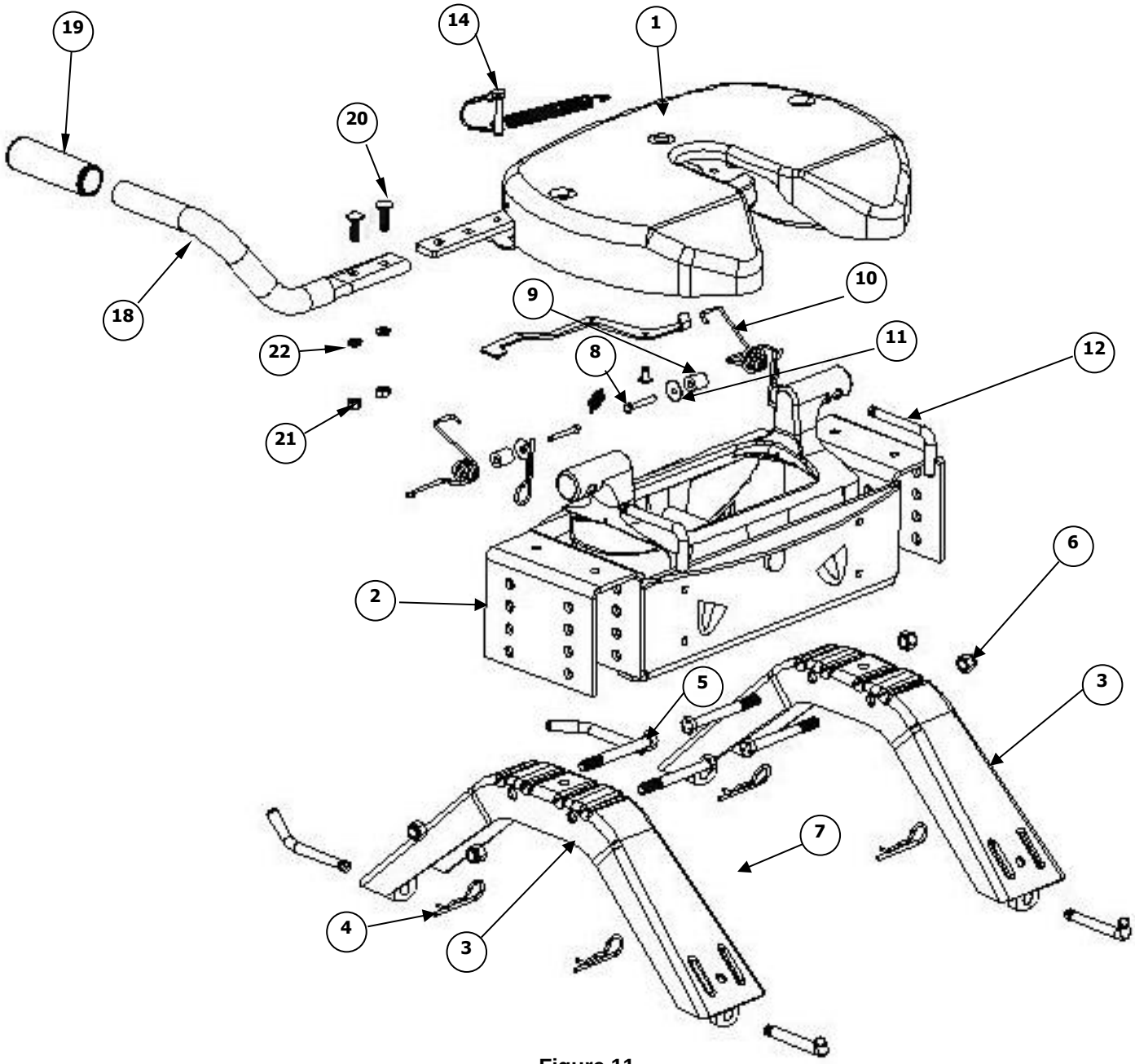

Figure 11

REF #	QTY.	DESCRIPTION
1	1	18K HEAD ASSEMBLY
2	1	18K CENTER SECTION
3	2	SIDE BRACKET (P/N 30834)
4	6	RETAIN CLIP (P/N 55515)
5	4	½" X 4 1/2 " BOLTS (P/N 01150018)
6	4	½" LOCK NUTS (P/N 3376)
7	4	½" DIA LONG PULL PIN (P/N 30434)
8	2	¼" X 20 – 1.75 HX HEAD BOLT (P/N 55256)
9	2	TUBE SPACER (P/N 110898)
10	2	TORSION SPRING (P/N 110787 & 110788)
11	2	¼" WASHER (P/N 55546)
12	2	1/2" PULL PIN 90° (P/N 110974)

REF #	QTY	DESCRIPTION
13	1	HANG TAG (P/N 110795)
14	1	BAIL PIN WITH LANYARD (P/N 110896)
15	1	LABEL, PINCH POINT (P/N 110954)
16	1	LABEL, OPERATION WARNING (P/N 110793)
17	2	LABEL, RATING (P/N 113145)
18	1	HANDLE TUBE (P/N 110470)
19	1	HANDLE GRIP (P/N 07417)
20	2	3/8 CARRIAGE BOLT (P/N 01246005)
21	2	3/8 NUT (P/N 55052)
22	2	3/8 LOCK WASHER (P/N 01129006)

NOTES

LIMITED LIFETIME WARRANTY

Part No:_____ Original Purchase:_____

Original Owner:_____ Original Installer:_____

1. **Limited Lifetime Warranty ("Warranty").** Cequent Performance Products, Inc. ("We" or "Us") warrants to the original consumer purchaser only ("You") that the product will be free from material defects in both material and workmanship, ordinary wear and tear excepted; provided that installation and use of the product is in accordance with product instructions. There are no other warranties, express or implied, including the warranty of merchantability or fitness for a particular purpose. This warranty is not transferable.
2**. Limitations on the Warranty**. This Warranty does not cover: (a) normal wear and tear; (b) damage through abuse, neglect, misuse, or as a result of any accident or in any other manner; (c) damage from misapplication, overloading, or improper installation; (d) improper maintenance and repair; and (e) product alteration in any manner by anyone other than Us, with the sole exception of alterations made pursuant to product instructions and in a workmanlike manner.
3. **Obligations of Purchaser**. To make a Warranty claim, contact Us, at our principal address of 47912 Halyard Dr. Suite 100, Plymouth, MI 48170, 1-888-521-0510, identify the product by model number, and follow the claim instructions that will be provided. Any returned product that is replaced by Us becomes our property. You will be responsible for return shipping costs. Please retain your purchase receipt to verify date of purchase and that You are the original consumer purchaser. The product and the purchase receipt must be provided to Us in order to process Your Warranty claim.
4**. Remedy Limits**. Product replacement is Your sole remedy under this Warranty. We shall not be liable for service or labor charges incurred in removing or replacing a product or any incidental or consequential damages of any kind.
5. **Assumption of Risk**. You acknowledge and agree that any use of the product for any purpose other than the specified use(s) stated in the product instructions is at Your own risk.
6. **Governing Law**. This Warranty gives You specific legal rights, and You also may have other rights which vary from state to state. This Warranty is governed by the laws of the State of Michigan, without regard to rules pertaining to conflicts of law. The state courts located in Oakland County, Michigan shall have exclusive jurisdiction for any disputes relating to this Warranty.

Cequent Performance Products, Inc.
47912 Halyard Dr. Suite 100
Plymouth, MI 48170

 ©2011, 2014 CEQUENT PERFORMANCE PRODUCTS, INC

Appendix A

GUIDELINES FOR MATCHING HITCH, TRUCK, AND TRAILER

 ©2011, 2014 CEQUENT PERFORMANCE PRODUCTS, INC

GUIDELINES FOR MATCHING HITCH, TRUCK, AND TRAILER

⚠ WARNING:
Failure to follow all of these instructions may result in death or serious injury!

⚠ WARNING:
Failure to check and follow tow ratings could result in tow vehicle damage or truck and trailer separation while towing.

- **Trailer and its contents together must not exceed truck, hitch and/or trailer tow ratings.**
- **Towing vehicle must have a manufacturer's rated towing capacity equal to or greater than the gross trailer weight (dry weight of the trailer plus payload of the trailer). (Figure 12)**
- **Gross weight of trailer must not exceed 20,000 pounds.**
- **King pin weight must not exceed 5,000 pounds (Figure 13). If in doubt have king pin weight measured by qualified facility.**

Figure 12

1. Check Tow Ratings:

Vehicle Tow Rating:_____.
5th Wheel Kit Hitch Rating:_____20,000 lbs.__.
Gross Trailer Weight (Figure 12):_____.

***Trailer weight should be the lowest of these recorded ratings for safe towing conditions.**

2. Cequent Performance Products hitches are designed for use with recreational fifth wheel trailers only. Hitch applications other than recreational fifth wheel trailers must be approved in writing by Cequent Performance Products' Engineering Department.
3. Use only a SAE 2-inch kingpin with your 20K Fifth Wheel Hitch.
4. Approximately 15%-25% of trailer weight should be on hitch (Pin Weight). See Figure 13.

Figure 13

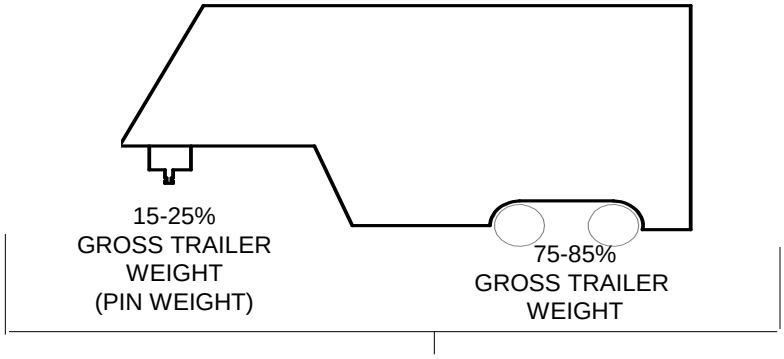

 ©2011, 2014 CEQUENT PERFORMANCE PRODUCTS, INC

5. Trucks come in many different configurations. Cequent Performance Products' hitches are designed for use in light trucks such as the Ford F-Series, the Chevy Silverado and the Dodge Ram. Cequent Performance Products recommends the use of long bed (8ft) light trucks for the best combination in truck - trailer turning clearance.

Rule of thumb:	The distance from the back of the truck cab to the center of the rear truck axle ("X" in Figure 14), should be approximately 4 inches greater than one-half the trailer width ("Y" in Figure 4)

Figure 14

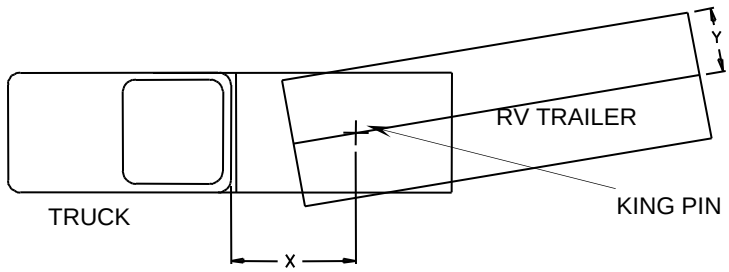

6. If a short bed pickup (less than 8 ft. but longer than 6 ft.) is to be used for towing, Cequent Performance Products recommends the trailer be equipped with an extended pin box to help gain additional truck - trailer turning clearance (See trailer manufacturer for options) (Figure 15). It also may be helpful to add a Square Tube or Round Tube Slider **(Part # 30048 / 50008)** for increased turning clearance for low speed, non-highway maneuvering.

Figure 15

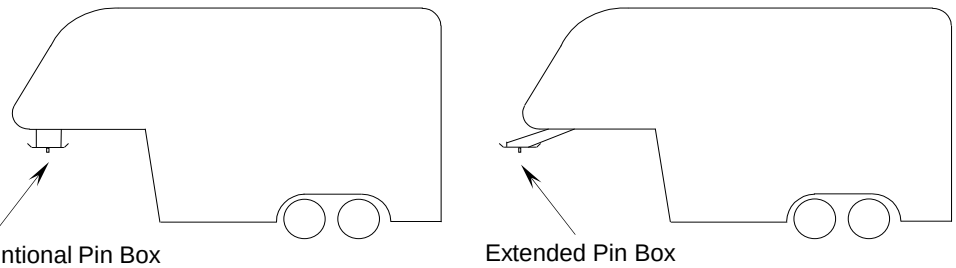

⚠ WARNING:

Do Not install this fifth wheel hitch on or attempt to tow with a short bed pickup truck that has a bed shorter than 6 ft.!

7. The height of the hitch and the pin box should be adjusted so the trailer is approximately level as it is towed. Allow approximately 6 inches clearance between the top of the pickup walls and the underside of the front of the trailer for pitch and roll of the trailer. (Figure 16). Allow more clearance between pickup walls and trailer for off road use.

Figure 16

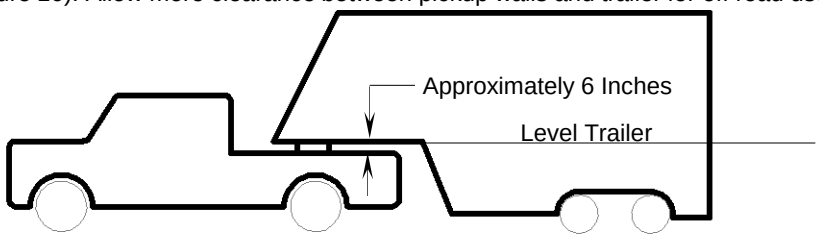

CAUTION:

The measurements above are guidelines. If your measurements are close to these numbers re-check clearances. If vehicle and/or trailer has any added bed vicinity accessories (i.e. fairings, air dams, ground effects, bed rails, etc.). Additional dimensioning and clearance checks have to be made.

 ©2011, 2014 CEQUENT PERFORMANCE PRODUCTS, INC

8. Hitch height determination:
With trailer leveled and on level ground measure from the ground to the king pin box, “A” in Figure 17. Secondly measure from the height of the inside of the truck bed, “B” in Figure 17. Dimensions “C” and “D” in Figure 17 can be used to determine the amount of clearance over the side rails, as mentioned in Note 17.

Hitch Height = A – B + 2”

The 2” value is an estimate of suspension compression due to king pin weight of the trailer. This compression could range between 1”-5” depending on the truck being used and the trailer being towed.

D – C + 2” > 6” as noted in Note 7.

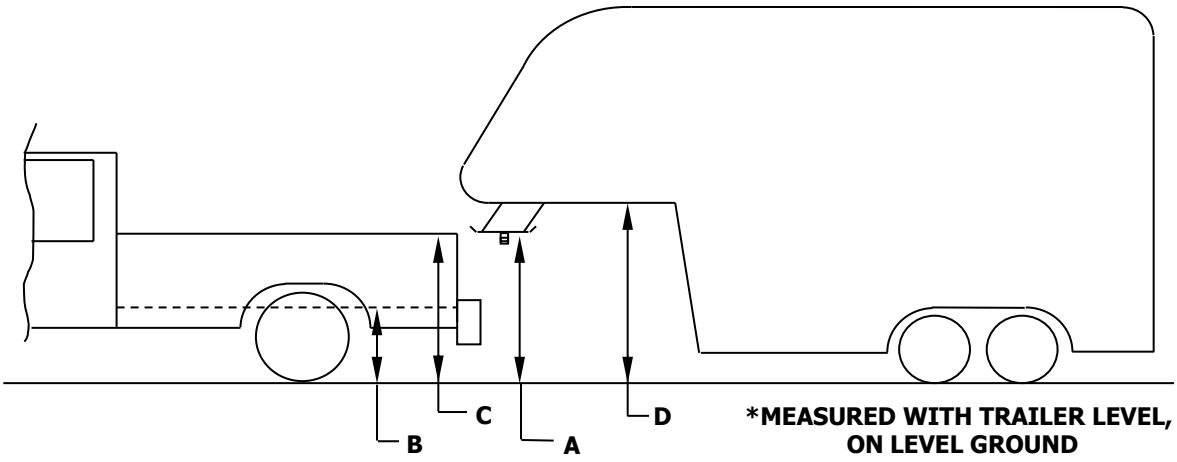

Figure 17

9. If a lube plate is to be used with a 5th Wheel Kit it must be at least 12” in diameter. Cequent Performance Products offers this optional lube plate as part # 83001 / 40001.

⚠ **WARNING:**

- **Connection for trailer wiring must be located at the side of the truck bed between the driver’s seat and the rear wheel to prevent operators from working between the truck and trailer.**

- **Avoid putting any part of your body under the trailer or between the truck and trailer. Unexpected or accidental movement of the truck or the trailer can cause serious injury or death**

- **If you must place any part of your body under the trailer or between the truck and trailer you MUST perform ALL of the following steps:**
  - **Check that the truck transmission is in park**
  - **Check that the emergency brake is on**
  - **Block in front of and behind all trailer tires**
  - **Check that the trailer landing gear are resting on firm ground**

 ©2011, 2014 CEQUENT PERFORMANCE PRODUCTS, INC

Appendix B

GUIDELINE FOR CENTER SECTION ORIENTATION

 ©2011, 2014 CEQUENT PERFORMANCE PRODUCTS, INC

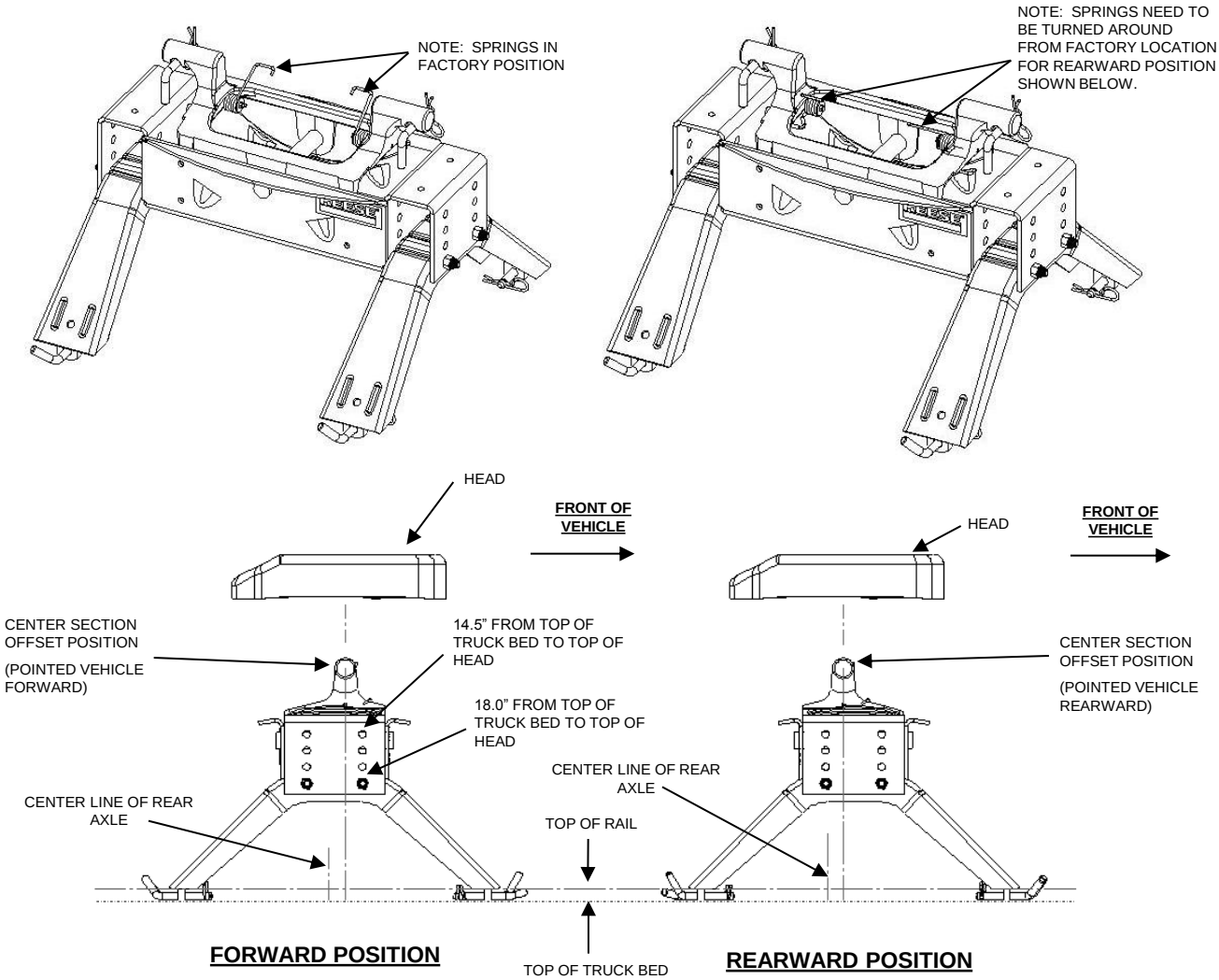
NOTE: SPRINGS IN FACTORY POSITION
NOTE: SPRINGS NEED TO BE TURNED AROUND FROM FACTORY LOCATION FOR REARWARD POSITION SHOWN BELOW.
HEAD
FRONT OF VEHICLE
HEAD
FRONT OF VEHICLE
CENTER SECTION OFFSET POSITION
(POINTED VEHICLE FORWARD)
14.5" FROM TOP OF TRUCK BED TO TOP OF HEAD
18.0" FROM TOP OF TRUCK BED TO TOP OF HEAD
CENTER SECTION OFFSET POSITION
(POINTED VEHICLE REARWARD)
CENTER LINE OF REAR AXLE
CENTER LINE OF REAR AXLE
TOP OF RAIL
FORWARD POSITION
TOP OF TRUCK BED
REARWARD POSITION

INSTRUCTION MANUAL
Kwik Slide

Cequent Towing Products *PLYMOUTH, MI*

FOR USE WITH
30048

DEALER/INSTALLER:

(1) Provide this Manual to end user.
(2) Physically demonstrate sliding procedures in this Manual to end user.
(3) Have end user demonstrate that he/she understands procedures.

END USER:

(1) Read and follow this Manual every time you use this Kwik Slide.
(2) Save this Manual for future reference.
(3) Pass on copies of Manual to any other user or owner of a Kwik Slide.
(4) Never remove Kwik Slide warning decal as shown on the cover of this manual. If damaged, contact Cequent Towing Products (1-888-521-0510) for free replacement decals.

figure 1

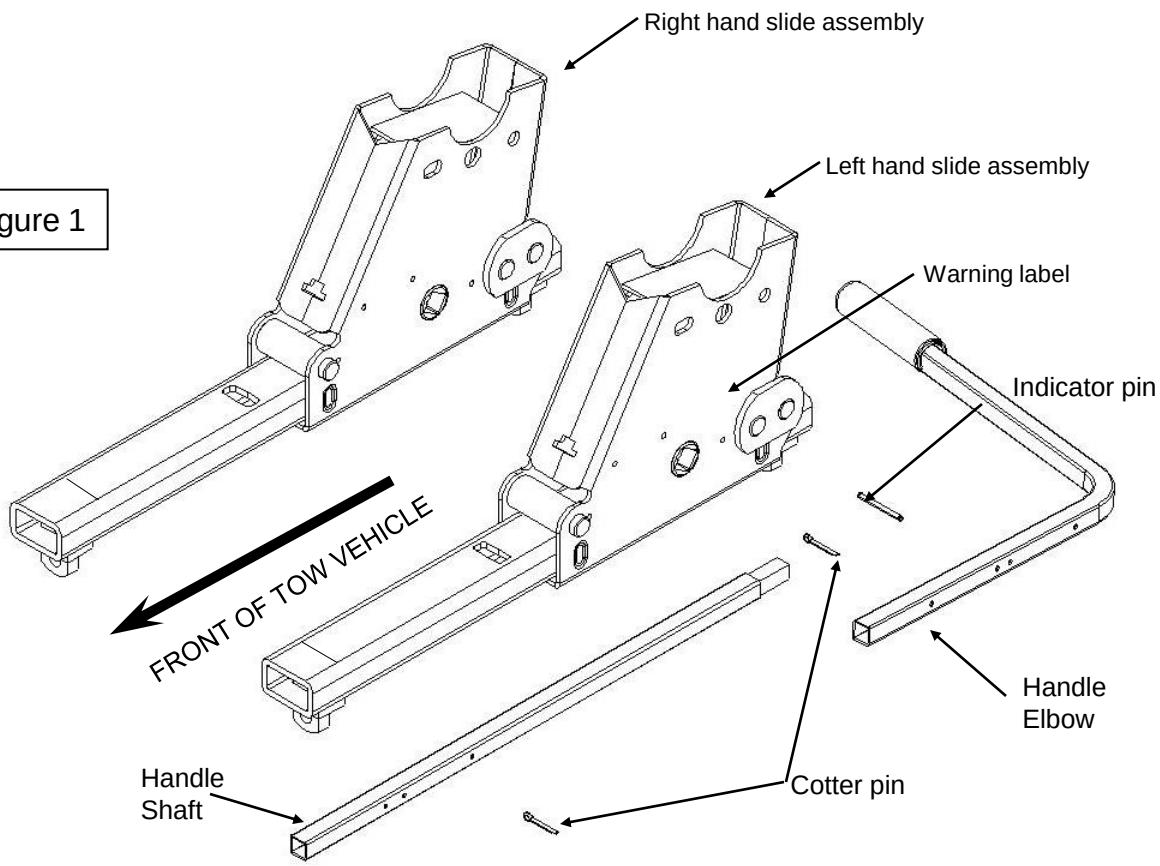

(OVER)

 ©2011 CEQUENT PERFORMANCE PRODUCTS, INC. Printed in Mexico

⚠ WARNING:
Failure to follow these instructions may result in death or serious injury!

⚠ WARNING:
Kwik-Slide hitches that are not properly locked can suddenly move and kill you!
To avoid death or serious injury:

- **Never place any part of body in truck bed or between truck and trailer unless the following conditions are met :**
  - **Truck is in park with emergency brake on, and**
  - **Trailer landing gear is down and resting on firm ground, and**
  - **All trailer wheels are blocked on each side of wheel**
- **Always perform "push" or "pull test" by following instructions in this manual.**

BEFORE INSTALLATION

1. 5th wheel trailers are typically designed for use with long bed (8 foot) trucks. These trucks provide ample turning clearance between the truck cab and trailer front. Short bed trucks (less than 8 ft. but longer than 6 ft.) require additional turning clearance to avoid truck cab or trailer damage during normal turns. This is best accomplished through the use of a trailer pin box extension (see figure 2). Cequent Towing Products suggest the use of a minimum of a 13 inch pin box extension to be able to comfortably make normal turning maneuvers with a short bed truck. Contact your trailer manufacturer for pin box extension options.

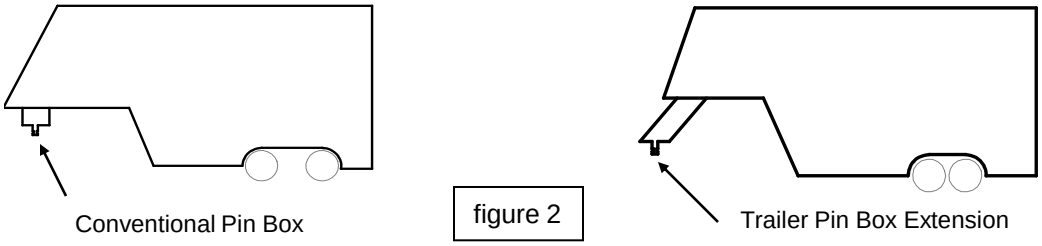

figure 2

⚠ CAUTION:
Turning clearance is reduced when towing with a short bed truck! This can result in trailer striking inside of truck bed. Always monitor truck cab and trailer clearance during turns. Failure to do so could result in significant property damage.

2. The 5TH WHEEL KWIK SLIDE is designed to be used with Cequent Towing Products 5TH WHEEL installations only. These installations are described in the Cequent Towing Products INSTALLATION INSTRUCTIONS BASE RAIL MOUNTING KIT (P/N 30035). These instructions specify the exact placement of the base rails in relation to the rear truck axle for most current pickup trucks.

3. The trailer king pin should always be directly above or slightly forward of the rear truck axle when towing. Trailers should never be towed with the trailer king pin rearward of the rear truck axle in highway conditions (see Fig. 3).

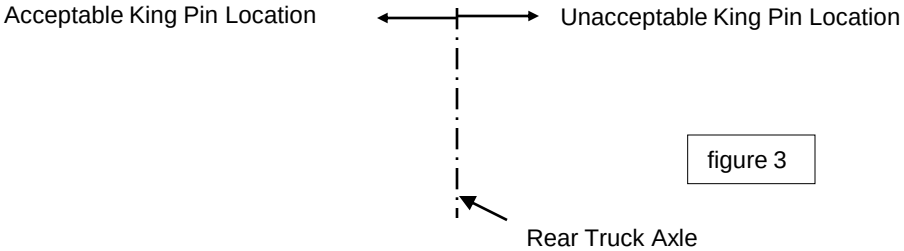

figure 3

 ©2011 CEQUENT PERFORMANCE PRODUCTS, INC.

4. The 5TH WHEEL KWIK SLIDE provides additional turning clearance for low speed, off-highway maneuvering such as backing a RV trailer into a tight camp site. This is done by sliding the hitch 10 inches rearward of its normal Towing Position (figure 4) to a Maneuvering Position (figure 5). This places the trailer king pin behind the rear truck axle.

figure 4

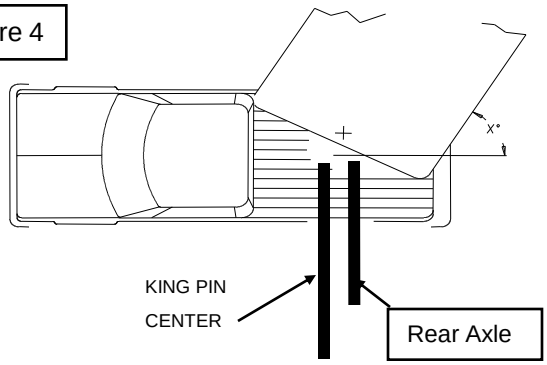

In this figure, the Kwik-Slide is positioned in the **Towing Position**, forward of the rear axle. Note that a 13-1/2" pin box extension has been used. This is the <u>only</u> position you should use when towing!

figure 5

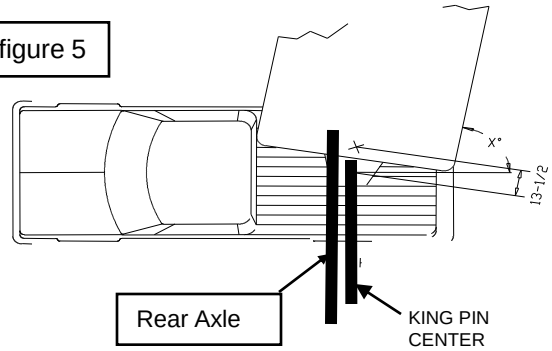

In this figure, the Kwik-Slide is positioned in the **Maneuvering Position**. Note that a 13-1/2" pin box extension has been used. The maneuvering Position should <u>only</u> be used at a low speed, when high maneuverability is needed!

⚠ **<u>WARNING:</u>**

Never tow trailers in highway or high speed conditions with KWIK-SLIDE in the Maneuvering Position (rearward of the rear axle)! Towing with the trailer king pin rearward of rear truck axle can affect weight distribution and may interfere with the towing vehicle's handling and response characteristics. Poor handling and response characteristics could result in death or serious injury.

5. Due to the heavy duty nature of the 5TH WHEEL KWIK-SLIDE assembly, the assembly may not slide by hand when installed, especially if base rails are not securely installed to be parallel and centered. Rails should be installed so that the center lines of each rail are 21.94 inches (21 15/16") apart (see figure 6). Diagonal dimensions "x" and "y" (as depicted in figure 6) should be within 0.1 inch (1/8") of each other. ***If this alignment is not met, loosen hardware and realign base rails. Retorque hardware per instructions after base rails are properly aligned.***

6. Drill 2 holes identified in figure 6 (check for obstructions). Drill all holes with 3/16" drill and enlarge them with a 17/32" drill. Always use sharp drill bits. Install 1/2" carriage bolts into holes. Install slotted spacer above or below bed to fill corrugations in bed floor, also add bolt plate below bed with washers and nut. These bolts are in addition to the 8 bolts used when installing base rails according to instructions 30035.

figure 6

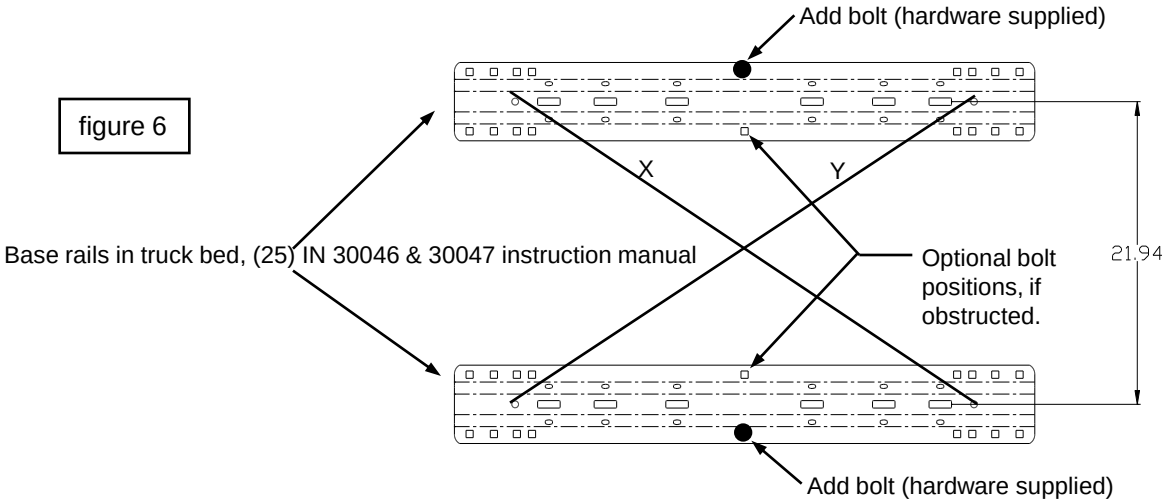

 ©2011 CEQUENT PERFORMANCE PRODUCTS, INC.

INSTALLATION

1. These instructions should be used to mount 5TH WHEEL KWIK-SLIDE. Care and attention to detail will ensure a quick, safe and quality installation. Check parts against figure 1 to become familiar with kit.

2. Before installing 5TH WHEEL KWIK-SLIDE, leaf spring must be greased as shown using white lithium grease or equivalent (see figure 7). For best results, use aerosol white lithium grease with a spray nozzle extension. Make sure entire underside of spring is coated! Repeat this application monthly during use.

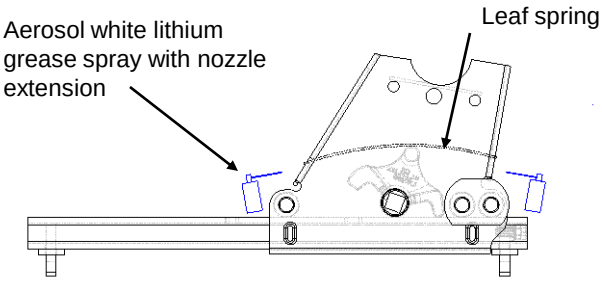

figure 7

3. Before setting the 5TH WHEEL KWIK-SLIDE into the bed of the pickup, attach handle shaft to handle elbow (see figure 1 on first page). Insert handle assembly through left hand slide assembly (driver's side of towing vehicle) and then through the right hand side slide assembly (see figure 8).
If 5TH WHEEL KWIK-SLIDE is being used with the PRO-SERIES 15k head assembly insert handle through right hand slide assembly (passenger side of towing vehicle) and then through left hand side of slide assembly.

4. Set the 5TH WHEEL KWIK-SLIDE into base rails and pin in position with the KWIK-SLIDE in the middle of the tubes (see figure 9).

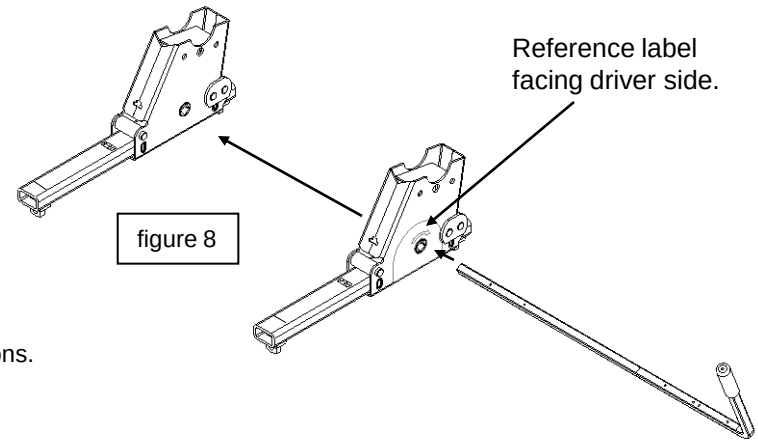

figure 8

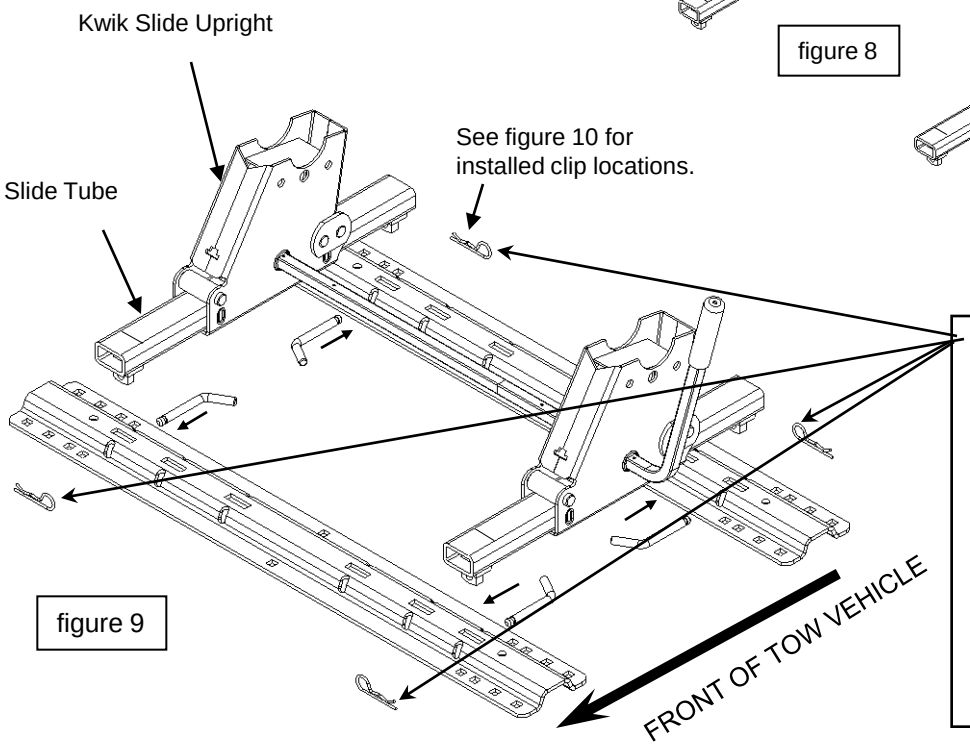

figure 9

⚠ WARNING:
Pull pin spring clips must be on the outside of base rail as shown. Spring clips installed on the inside of base rail will not allow Kwik-Slide to slide far enough to lock. Kwik-Slides that are not properly locked can suddenly move and cause serious injury or death.

 ©2011 CEQUENT PERFORMANCE PRODUCTS, INC.

5. Loosely assemble head support to 5TH WHEEL KWIK-SLIDE at desired height. Hardware will be staggered when assembled. (see figure 10)

NOTE: Bottom position may not be used on all hitch models.

Use 2 cotter pins provided to trap handle in place as shown. Install indicator pin in handle as shown. Install such that the indicator pin just goes through the bottom side of the handle. (see figure 10).

6. Use a two step procedure to tighten hardware

A. Start at a point and snug all hardware. **Do not overlook connections under bed at frame. Note sequence.**

B. Using same start point and sequence, torque all hardware. Torque 1/2" bolts to 85 lb.ft.

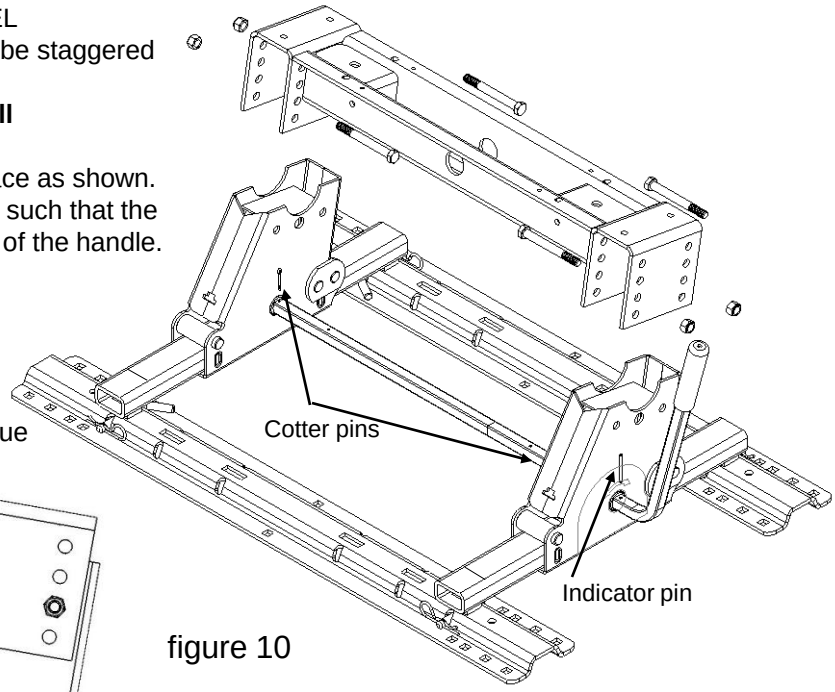

figure 10

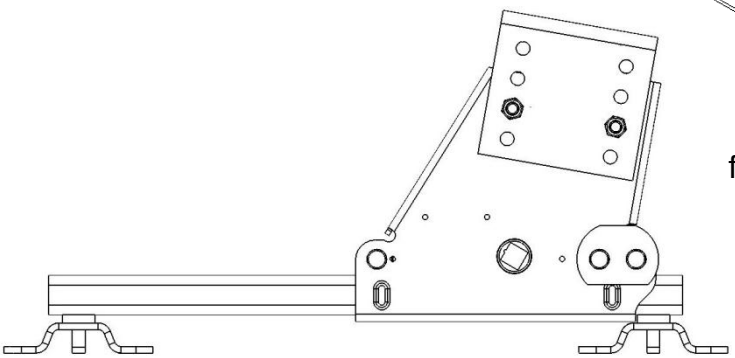

7. Coat top & side surfaces of slide tube and roller holes (6 places) in each slider assembly with all purpose grease or teflon lube, use as needed (see figure 11). Repeat this application monthly during use.

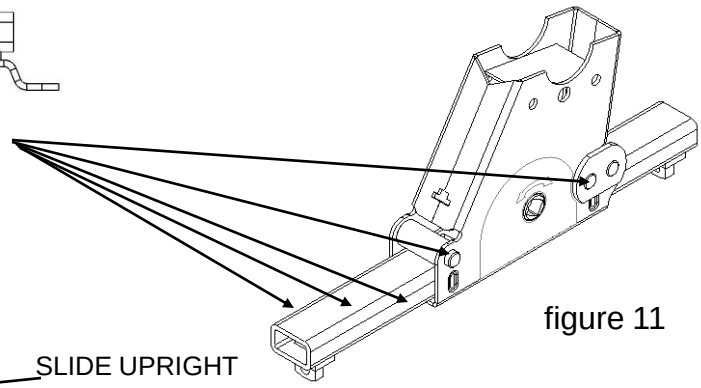

figure 11

OPERATION

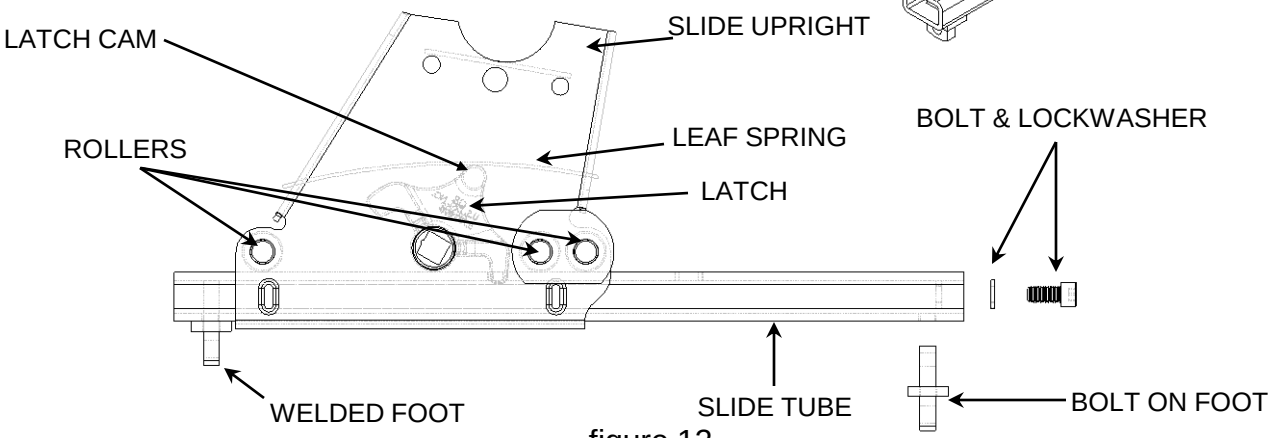

figure 12

⚠ **WARNING:**

Kwik-Slide hitches that are not properly locked can suddenly move and kill you!

To avoid death or serious injury:

•Never place any part of body in truck bed or between truck and trailer unless the following conditions are met :

•All trailer tires MUST be blocked in front and behind each tire, AND

•Trailer landing gear MUST be resting on firm ground, AND

•Truck MUST be stationary, in park, with emergency brake on!

•Always perform "push" or "pull test" by following instructions in this manual.

 ©2011 CEQUENT PERFORMANCE PRODUCTS, INC.

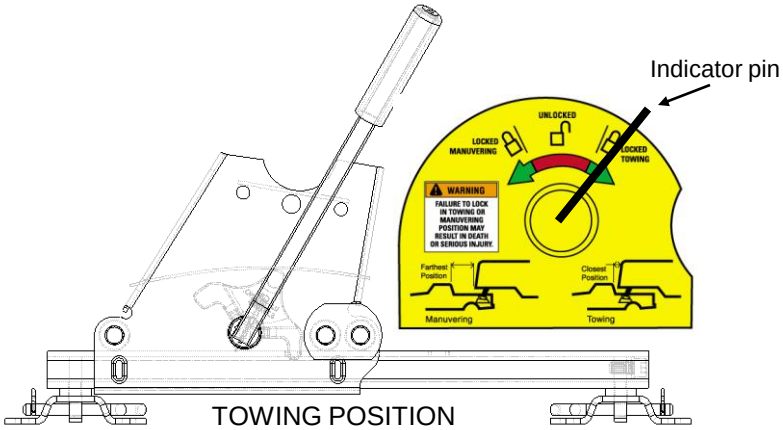

TOWING POSITION
figure 13

Leaf spring on latch cam keeps latch from disengaging. Hitch can not move rearward with latch engaged. Rearward load forces latch further into slot. Hitch can not move forward due to welded foot (see figures 1, 11 and 12).

FRONT OF TOW VEHICLE

MOVE FROM TOWING TO MANEUVERING POSITION

1. Position truck and trailer in a **straight line** on a flat, level area.
2. Place truck in "Park" with emergency brake "on".
3. Block front and back of all trailer wheels.
4. Lower trailer landing gear so it is resting on firm ground.
5. Pull handle forward (see figure 14). Indicator pin should be over red unlocked range near the green locked maneuvering range (see figure 14).Spring pressure will press latch against top of tube, the latch will lock into slot when the 5TH WHEEL KWIK-SLIDE moves to the maneuvering position (see figure 15).
6. Return to truck. Release emergency brake. Manually engage trailer brake and pull truck forward until 5TH WHEEL KWIK SLIDE stops at bolt in foot (figure 12) and latch engages in maneuvering position (see figure 15).
7. Perform "**PUSH TEST**" as follows:
   1. Manually engage trailer brakes from truck cab.
   2. Back truck into trailer against trailer wheel blocks.
   3. If Kwik-Slide does not move, latch has engaged tubes and Kwik-Slide should be locked in maneuvering position.
   4. If Kwik-Slide does move, latch has not engaged tubes. **DO NOT TOW!.** Repeat steps 1 - 7 above.
8. Again, place truck in "Park" with emergency brake "on".
9. Examine warning label. Indicator pin should now be over the green range on the left side of the warning label (see figure 15). If indicator pin is over red range on warning label, latch has not engaged tubes. **DO NOT TOW!** Repeat steps 1- 7 above.
10. After successfully performing above steps, fully raise trailer landing gear (See trailer manual).
11. Remove and store all trailer wheel blocks.

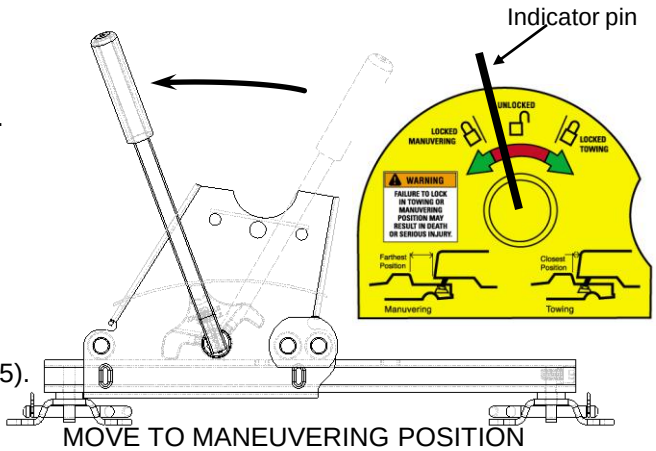

MOVE TO MANEUVERING POSITION
Figure 14

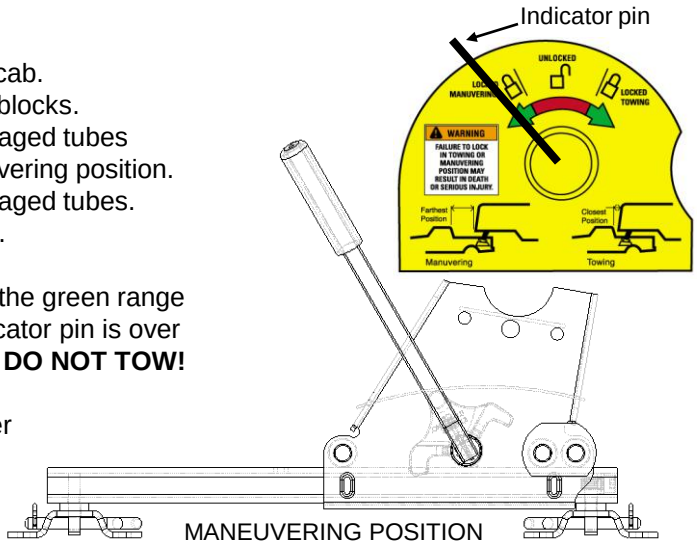

MANEUVERING POSITION
Figure 15

⚠ WARNING:

Kwik-Slide hitches that are not properly locked can suddenly move and kill you!

To avoid death or serious injury:

•Never place any part of body in truck bed or between truck and trailer unless the following conditions are met :

- **•All trailer tires MUST be blocked in front and behind each tire, AND**
- **•Trailer landing gear MUST be resting on firm ground, AND**
- **•Truck MUST be stationary, in park, with emergency brake on!**

•Always perform "push" or "pull test" by following instructions in this manual.

 ©2011 CEQUENT PERFORMANCE PRODUCTS, INC.

MOVE FROM MANEUVERING TO TOWING POSITION

FRONT OF TOW VEHICLE

1. Position truck and trailer in a **straight line** on a flat, level area.
2. Place truck in “Park” with emergency brake “on”.
3. Block front and back of all trailer wheels.
4. Lower trailer landing gear so it is resting on firm ground.
5. Push handle rearward (see figure 16). Indicator pin should be over red unlocked range near the green locked towing range (see figure 16).Spring pressure will press latch against top of tube, the latch will lock into slot when the 5TH WHEEL KWIK-SLIDE moves to the towing position (see figure 17).
6. Return to truck. Release emergency brake. Manually engage trailer brake and back truck rearward until 5TH WHEEL KWIK SLIDE stops at the welded foot (figure 12) and latch engages in towing position (see figure 17).
7. Perform “**PULL TEST**” as follows:
   1. Manually engage trailer brakes from truck cab.
   2. Pull truck and trailer forward against trailer wheel blocks.
   3. If Kwik-Slide does not move, latch has engaged tubes and Kwik-Slide should be locked in towing position.
   4. If Kwik-Slide does move, latch has not engaged tubes. **DO NOT TOW!.** Repeat steps 1 - 7 above.
8. Again, place truck in “Park” with emergency brake “on”.
9. Examine warning label. Indicator pin should now be over the green range on the right side of the warning label (see figure 17). If indicator pin is over red range on warning label, latch has not engaged tubes. **DO NOT TOW!** Repeat steps 1- 7 above.
10. After successfully performing above steps, fully raise trailer landing gear (See trailer manual).
11. Remove and store all trailer wheel blocks.

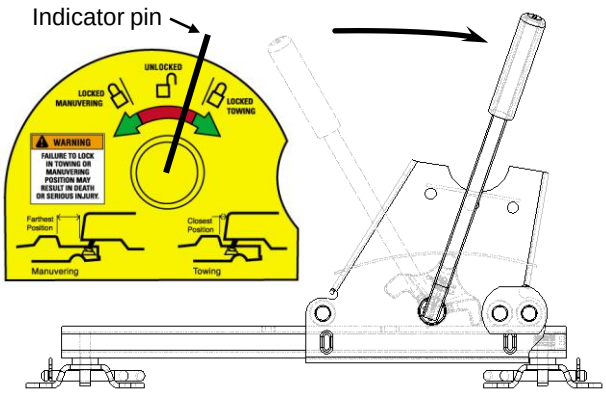

MOVE TO TOWING POSITION
Figure 16

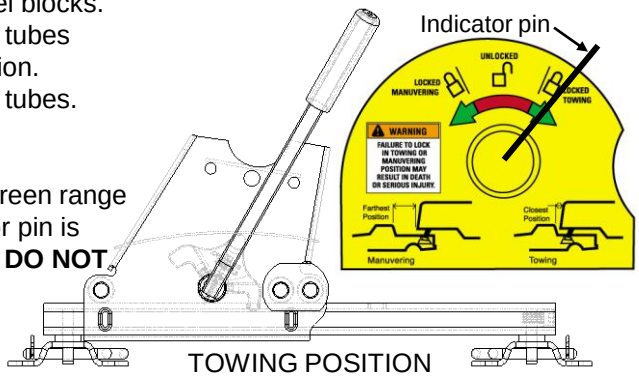

TOWING POSITION
Figure 17

⚠ **WARNING:**

Kwik-Slide hitches that are not properly locked can suddenly move and kill you!

To avoid death or serious injury:

•Never place any part of body in truck bed or between truck and trailer unless the following conditions are met :

- **All trailer tires MUST be blocked in front and behind each tire, AND**
- **Trailer landing gear MUST be resting on firm ground, AND**
- **Truck MUST be stationary, in park, with emergency brake on!**

•Always perform “push” or “pull test” by following instructions in this manual.

LIMITED LIFETIME WARRANTY

Part No:_____ Date of Original Purchase:_____

Original Owner:_____ Original Installer:_____

1. **Limited Lifetime Warranty (“Warranty”).** Cequent Performance Products, Inc. ("We" or “Us”) warrants to the original consumer purchaser only ("You") that the product will be free from material defects in both material and workmanship, ordinary wear and tear excepted; provided that installation and use of the product is in accordance with product instructions. There are no other warranties, express or implied, including the warranty of merchantability or fitness for a particular purpose. This warranty is not transferable.
2. **Limitations on the Warranty.** This Warranty does not cover: (a) normal wear and tear; (b) damage through abuse, neglect, misuse, or as a result of any accident or in any other manner; (c) damage from misapplication, overloading, or improper installation; (d) improper maintenance and repair; and (e) product alteration in any manner by anyone other than Us, with the sole exception of alterations made pursuant to product instructions and in a workmanlike manner.
3. **Obligations of Purchaser.** To make a Warranty claim, contact Us, at our principal address of 47912 Halyard Dr. Suite 100, Plymouth, MI 48170, 1-888-521-0510, identify the product by model number, and follow the claim instructions that will be provided. Any returned product that is replaced by Us becomes our property. You will be responsible for return shipping costs. Please retain your purchase receipt to verify date of purchase and that You are the original consumer purchaser. The product and the purchase receipt must be provided to Us in order to process Your Warranty claim.
4. **Remedy Limits.** Product replacement is Your sole remedy under this Warranty. We shall not be liable for service or labor charges incurred in removing or replacing a product or any incidental or consequential damages of any kind.
5. Assumption of Risk. You acknowledge and agree that any use of the product for any purpose other than the specified use(s) stated in the product instructions is at Your own risk.
6. **Governing Law.** This Warranty gives You specific legal rights, and You also may have other rights which vary from state to state. This Warranty is governed by the laws of the State of Michigan, without regard to rules pertaining to conflicts of law. The state courts located in Oakland County, Michigan shall have exclusive jurisdiction for any disputes relating to this Warranty.

Cequent Performance Products, Inc.
47912 Halyard Dr. Suite 100
Plymouth, MI 48170

 ©2011 CEQUENT PERFORMANCE PRODUCTS, INC.