COVER PAGE

30035 BASE RAIL MOUNTING KIT
10 BOLT RAIL KIT

NOTE!

If you have a newer model year truck you must go to one of our websites for the most recent updated instructions.

www.ReeseProducts.com or ***www.Draw-Tite.com***

INSTALLATION INSTRUCTIONS
30035 BASE RAIL MOUNTING KIT
10 BOLT RAIL KIT

DEALER/INSTALLER:

(1) Provide this Manual to end user.
(2) Physically demonstrate procedures in this Manual to end user.
(3) Have end user demonstrate that he/she understands procedures.

END USER:

(1) Read and follow this Manual every time you use Hitch.
(2) Save this Manual for future reference.
(3) Pass on copies of Manual to any other user or owner of Hitch.

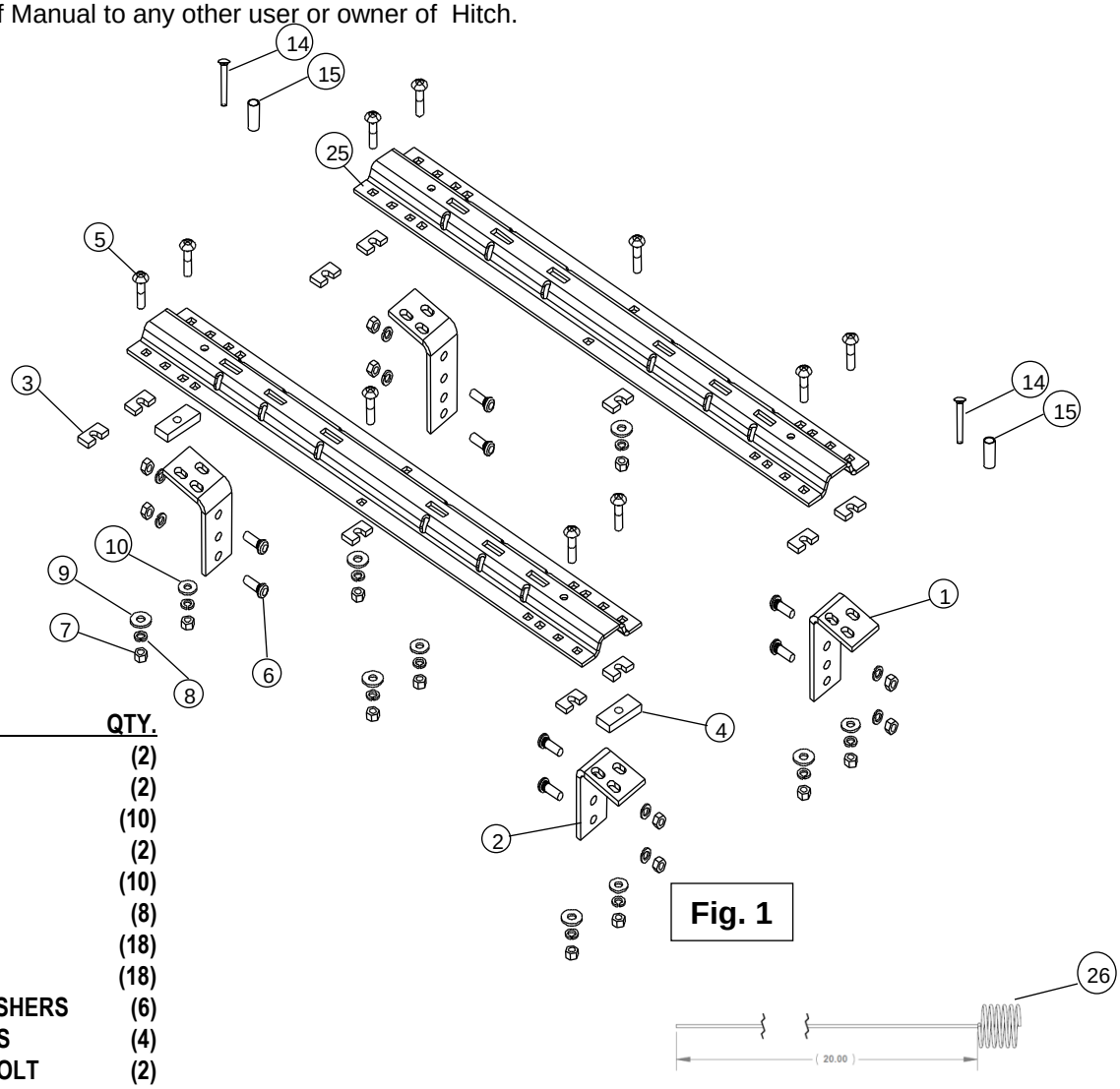

Fig. 1

BASERAILS	QTY.
1. LONG BRACKET	(2)
2. SHORT BRACKET	(2)
3. FILLER SPACER	(10)
4. SPACER	(2)
5. CARRIAGE BOLTS	(10)
6. KNURLED BOLTS	(8)
7. 1/2" NUTS	(18)
8. 1/2" LOCKWASHERS	(18)
9. 1/2" SERRATED WASHERS	(6)
10. 1/2" FLAT WASHERS	(4)
14. 4 1/2" CARRIAGE BOLT	(2)
15. TUBE SPACER	(2)
25. BASERAILS	(2)
26. PULL WIRE	(1)

NOTE: NOT ALL HARDWARE IS GOING TO BE USED ON ALL INSTALLATIONS

For Installation Assistance or Technical Help, Call 1-888-521-0510

© 2006,2007,2008,2009,2010,2011,2012,2013, 2014 Cequent Performance Products, Inc.
Made in China

GENERAL INSTRUCTIONS FOR 30035 BASE RAIL INSTALLATION

TOOLS

3/16" drill	3/4" Socket & Open End Wrench
17/32" drill	100 lb-ft Torque Wrench
1” drill (Some Dodge applications only)	"C" Clamps

1. The following instructions should be used to mount the fifth wheel. Care and attention to detail will ensure a quick quality installation. Check parts against parts list to become familiar with parts in kit. (See Fig. 1)

2. Raise rear of truck high enough to allow jack stands to be placed under rear spring hanger bracket of truck. This will provide maximum room to install the fifth wheel brackets.

> ⚠ **WARNING:**
> **If the truck is raised, be sure that the truck is properly blocked and restrained to prevent the truck from falling. Failure to do so may result in the truck suddenly falling, causing death or serious injury.**

3. Do not install mounting rails over plastic bed liners. Plastic bed liners must be cut out of the way. Base rails may be installed on spray in liner. **Note**: Consult installer for recommended curing time.

4. Use only CEQUENT PERFORMANCE PRODUCTS, INC. supplied bolts, nuts, and washers to install this kit. All bolts are Grade 5 and nuts are Grade 5 unless specified otherwise.

5. Specific instructions for most commonly used vehicles are included. Each frame bracket must be bolted to the vehicle frame with two bolts, unless optional weld is used**.**

> ⚠ **CAUTION:** ⚠
> **These instructions are guidelines only. Actual installation is the responsibility of the installer and the owner. Always measure truck and trailer before installing hitch to be sure that there is clearance at the cab and at the bumper to allow for turns.**

To prevent the trailer from hitting the cab with the trailer turned 90°, the center of the hitch should be at least 52" from the back of the cab when using a long bed truck. (Actual distance required will depend on trailer width and king pin location.) Short bed (Minimum 38” from back cab to axle center line) trucks require a minimum of a 13” extended pin box or a Reese SIDEWINDER™ Pinbox for regular maneuvers and 52” does not apply. **DO NOT INSTALL ON OR ATTEMPT TO TOW WITH A TRUCK HAVING LESS THAN A 6’ BED WITHOUT A REESE SIDEWINDER™ PINBOX INSTALLED ON THE TRAILER.**

6. Measurements are given from Rear Edge of truck bed to rear edge of the base rail closest to the Rear Edge of truck for most vehicle applications (See Fig. 2).

7. Center hitch between fender wells and make sure rails are square. Adjust position of rails until both diagonal measurements are the same. This should allow installation of a gooseneck or other fifth wheels to these rails (See Fig. 2).

> ⚠ **CAUTION:** ⚠
> **Check for obstructions before drilling. Failure to do so could result in damaged fuel or brake lines, structural members, etc. CEQUENT PERFORMANCE PRODUCTS, INC. does its best to communicate tow vehicle manufacturer changes; however, it is ultimately the responsibility of the installer to prevent damage due to installation.**

> ⚠ **CAUTION:** ⚠
> **It is important that 17/32" drill be used for holes in chassis frame as rib neck bolts may break if too small a hole is used and neck may not grip if too large a hole is used.**

8. Drill 10 holes identified in Fig. 2. (Hole location will vary for individual vehicle applications.) Drill all holes with 3/16" drill and enlarge them with a 17/32" drill. Always use sharp drill bits. A 3/16" pilot hole will greatly speed drilling larger holes. Install 1/2” carriage bolts into holes. Install 5/16” thick slotted spacer above or below bed to fill corrugations in bed floor. **NOTE: For Toyota 2000-2006 Tundra application, part #58197 spacer kit is required. Stack (1) 3/16” and (1) 5/16” thick slotted spacer to avoid crushing of truck bed.**

9. Install mounting brackets onto carriage bolts with the long brackets on forward bolts and short brackets on rearward (long and short brackets can be interchanged as needed). Secure bolts through mounting brackets with serrated washers, lock washers, and hex nuts. Secure the other four bolts through the bed with flat washers, lock washers, and nuts.

For Installation Assistance or Technical Help, Call 1-888-521-0510

10. Drill two holes in frame for each bracket. Select the holes which will give the greatest spread between bolts. Install eight 1/2”-13x1-3/8” ribbed neck bolts, (threads pointing out), lock washers, and hex nuts. Tighten nuts until bolt heads seat. Lubrication of knurls of all rib neck bolts is recommended.

Note: On vehicles with heavy duty suspensions, check for interference with bolts where brackets are mounted to frame. If interference with suspension spring results, cut bolt flush to nut outboard of frame or use weld option.

⚠ **WARNING:**

DO NOT lubricate threads. It may cause bolt failure.

⚠ **CAUTION:** ⚠

Check for obstructions before drilling. Failure to do so could result in damaged fuel or brake lines, structural members, etc. CEQUENT PERFORMANCE PRODUCTS, INC. does its best to communicate tow vehicle manufacturer changes; however, it is ultimately the responsibility of the installer to prevent damage due to installation.

11. Torque all nuts to 85 lb-ft

12. Pull wire provided to pull rib neck bolts through frame as needed per application

Drill locations will vary. See individual installation for location

Use side bracket/hitch base assembly to position rails (not included)

Fig. 2

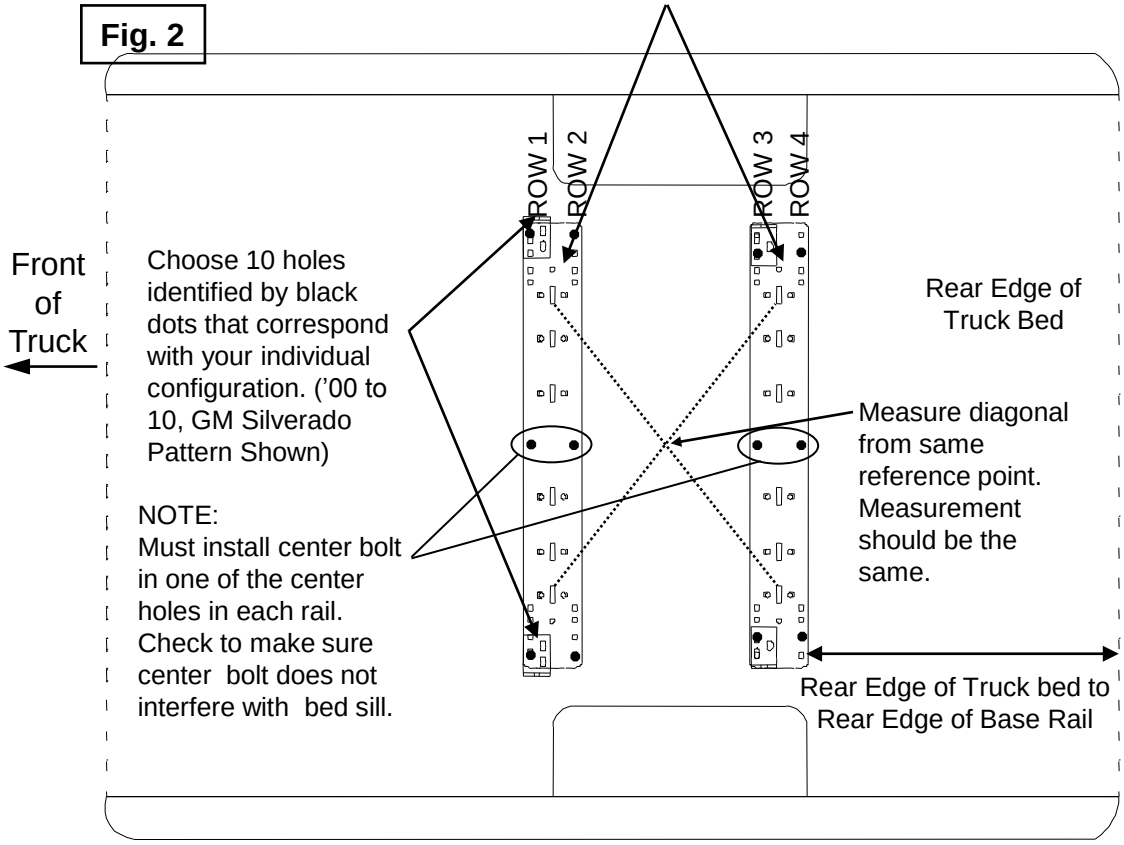

Chevy and GM 2011 and Newer, 2500 HD & 3500 HD Silverado and Sierra

⚠ CAUTION! ⚠

Read pages 2-3 of these instructions before starting installation. Failure to do so could result in significant vehicle damage!

IMPORTANT NOTES FOR THIS INSTALLATION:

1. Find parallel rows of bed sill spot welds in bed of truck. No drilling should be done in the ~4" between parallel rows of spot welds where the bed sill sits.

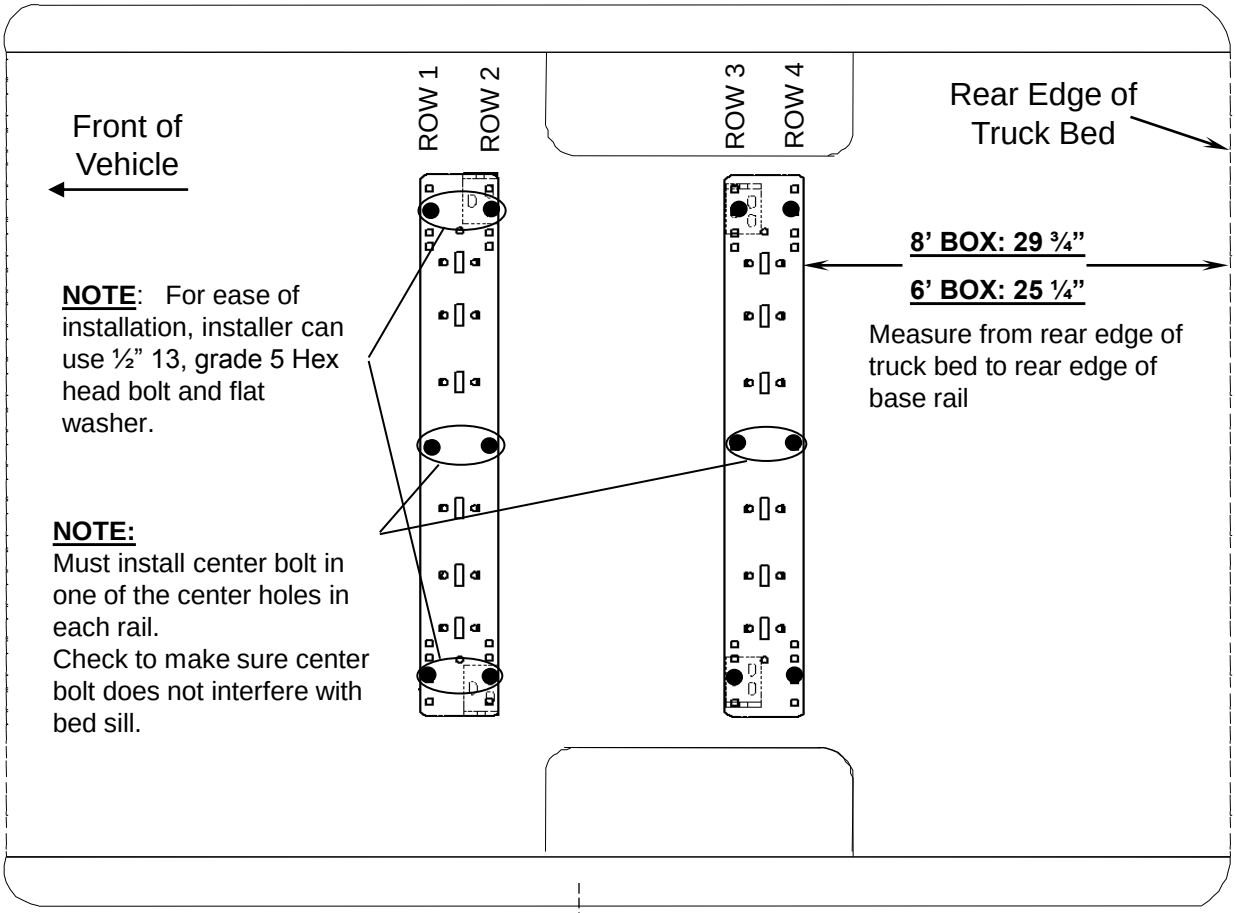

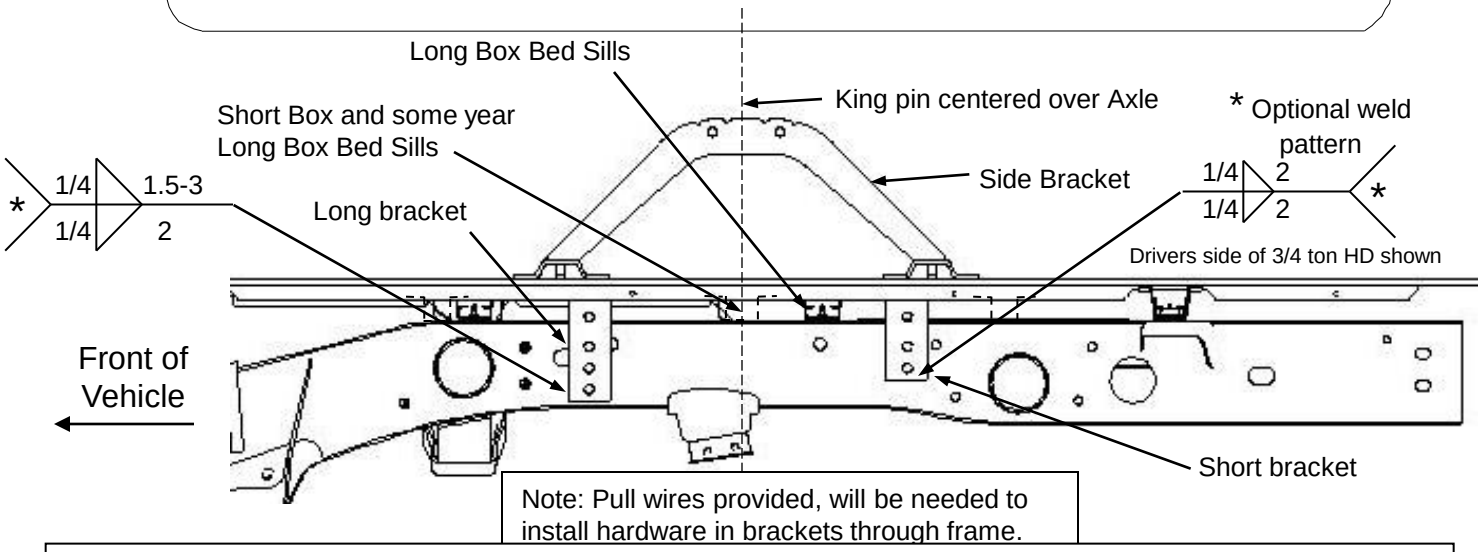

Note: Pull wires provided, will be needed to install hardware in brackets through frame.

CAUTION!

Check for obstructions before drilling. Failure to do so could result in damaged fuel or brake lines, structural members, etc. CEQUENT PERFORMANCE PRODUCTS, INC. does its best to communicate tow vehicle manufacturer changes; however, it is ultimately the responsibility of the installer to prevent damage due to installation.

GM '99 Silverado, Sierra (not Sierra Classic) models.
Chevy & GM '00 and newer 1500 Silverado Sierra. '00 to 10' HD models, and '04 & up 1500 Crew Cab with 5'8" bed (Reese Sidewinder™ Pinbox required for 5'8" bed).

⚠ **CAUTION!** ⚠

Read pages 2-3 of these instructions before starting installation. Failure to do so could result in significant vehicle damage!

IMPORTANT NOTES FOR THIS INSTALLATION:

1. Find parallel rows of bed sill spot welds in bed of truck. No drilling should be done in the ~4" between parallel rows of spot welds where the bed sill sits.

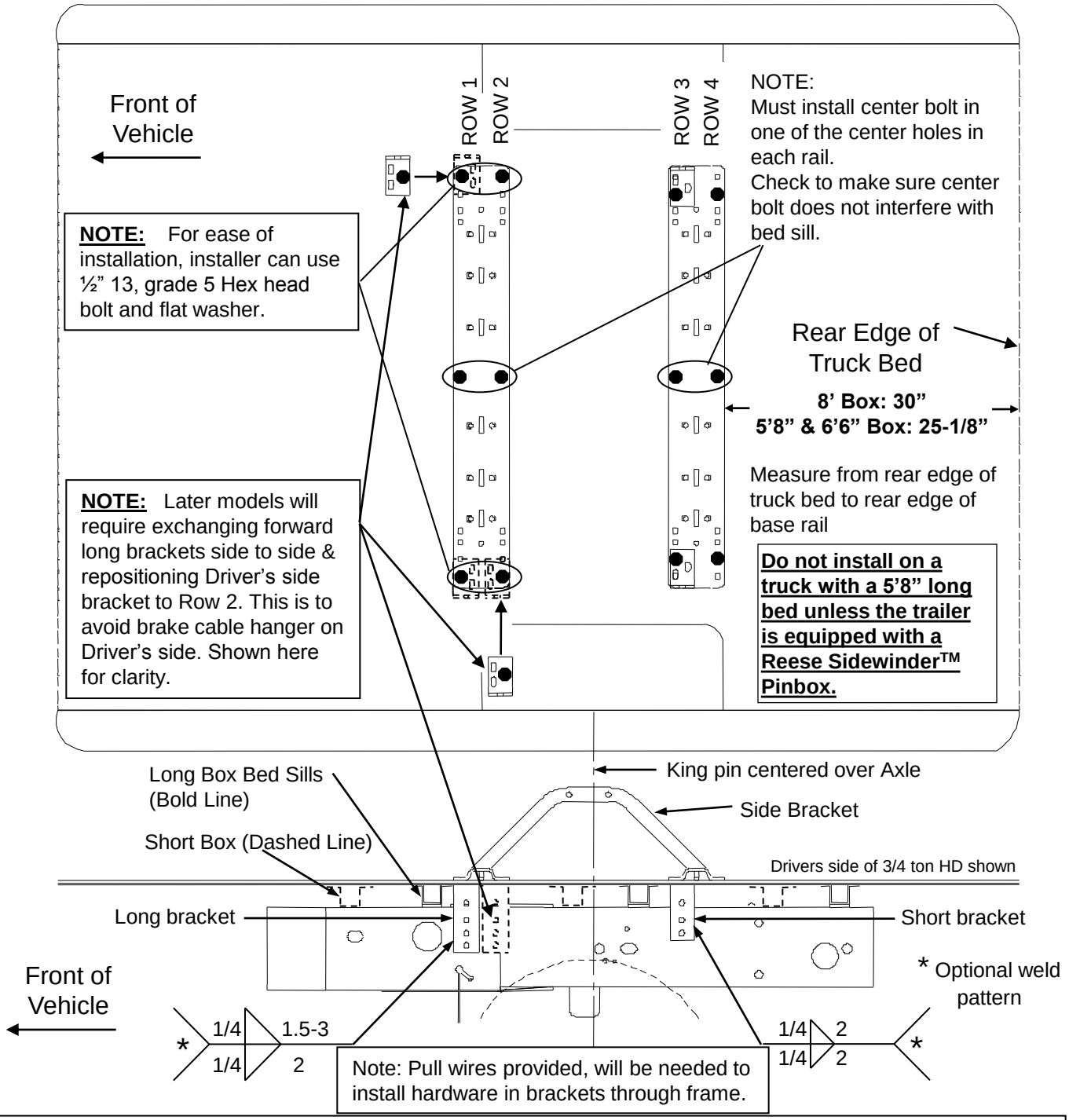

⚠ **CAUTION!** ⚠

Check for obstructions before drilling. Failure to do so could result in damaged fuel or brake lines, structural members, etc. TOWING PRODUCTS, Inc. does its best to communicate tow vehicle manufacturer changes; however, it is ultimately the responsibility of the installer to prevent damage due to installation.

CHEVROLET/GMC 88-98 / 92-98 4-DOOR / '99 SILVERADO SIERRA CLASSIC (WITH TAPERED FRAME) (RED TURN SIGNALS)

⚠ CAUTION! ⚠

Read pages 2-3 of these instructions before starting installation. Failure to do so could result in significant vehicle damage!

IMPORTANT NOTES FOR THIS INSTALLATION:

1. Find parallel rows of bed sill spot welds in bed of truck. No drilling should be done in the ~4" between parallel rows of spot welds where the bed sill sits.

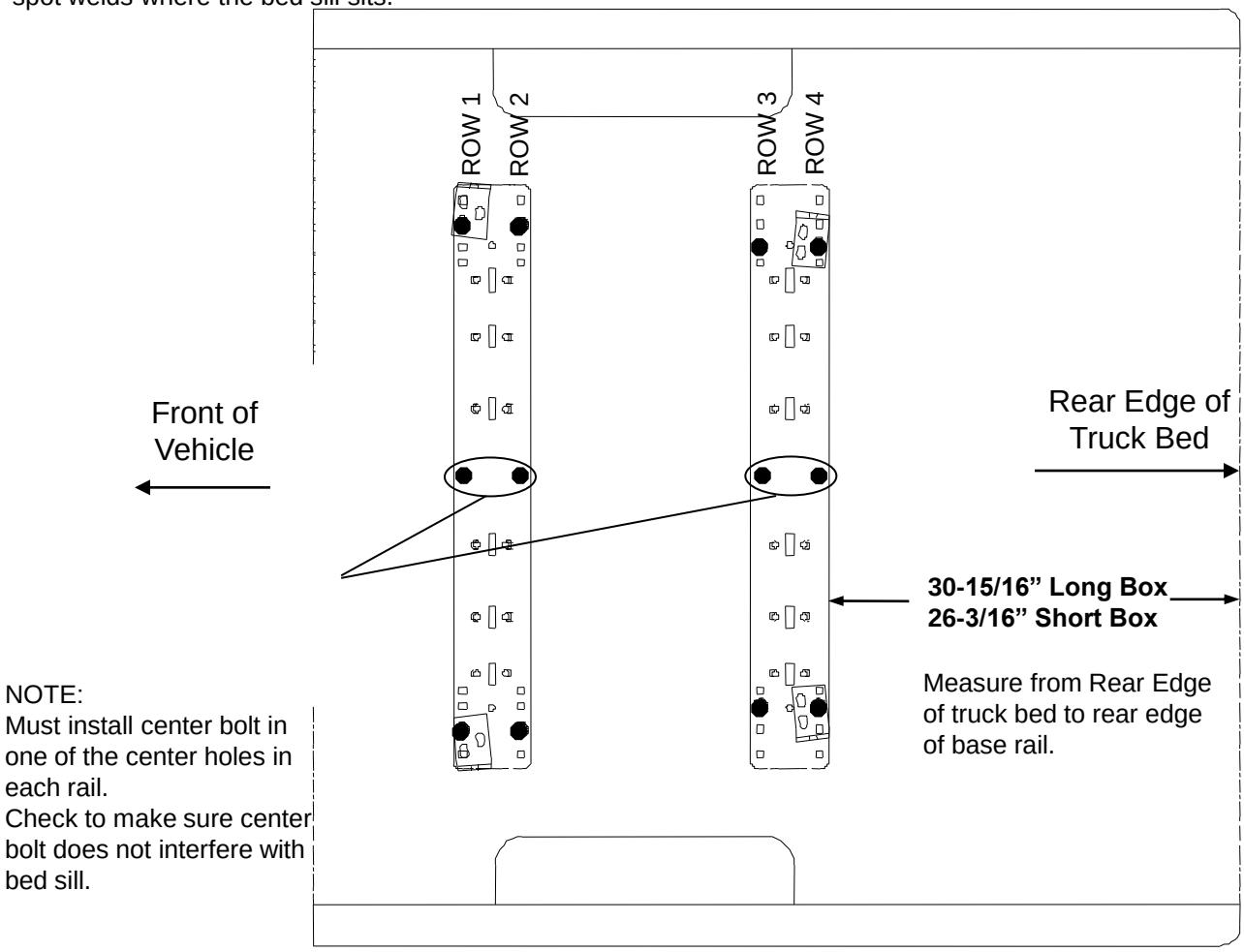

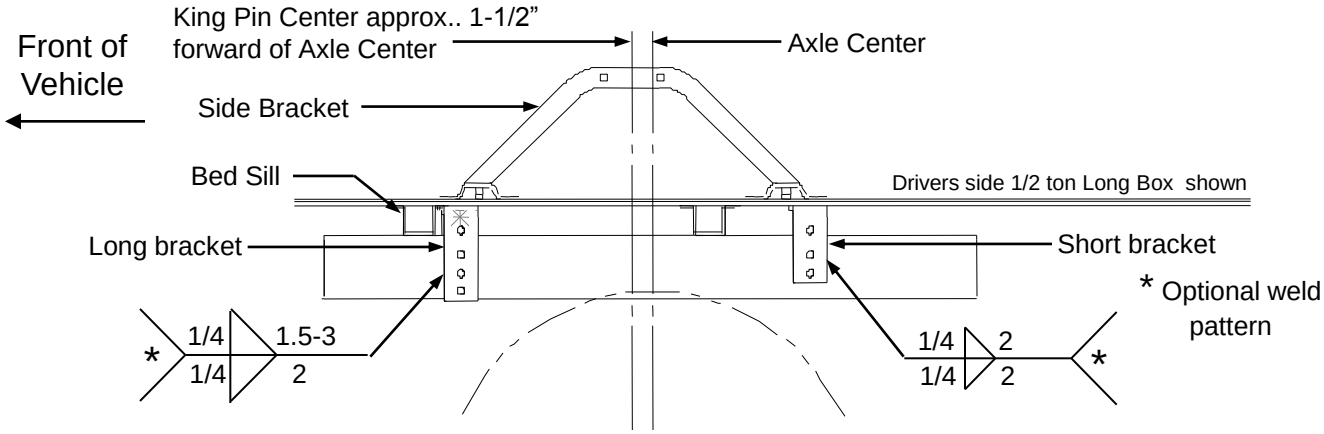

⚠ CAUTION! ⚠

Check for obstructions before drilling. Failure to do so could result in damaged fuel or brake lines, structural members, etc. CEQUENT PERFORMANCE PRODUCTS, INC. does its best to communicate tow vehicle manufacturer changes; however, it is ultimately the responsibility of the installer to prevent damage due to installation.

© 2006,2007,2008,2009,2010,2011,2012,2013, 2014 Cequent Performance Products, Inc.
Made in China

Chevrolet 73 to 87 / 73 to 92 4-door (GMC) (34” Straight, with Outside Shock Absorbers)

⚠ CAUTION! ⚠

Read pages 2-3 of these instructions before starting installation. Failure to do so could result in significant vehicle damage!

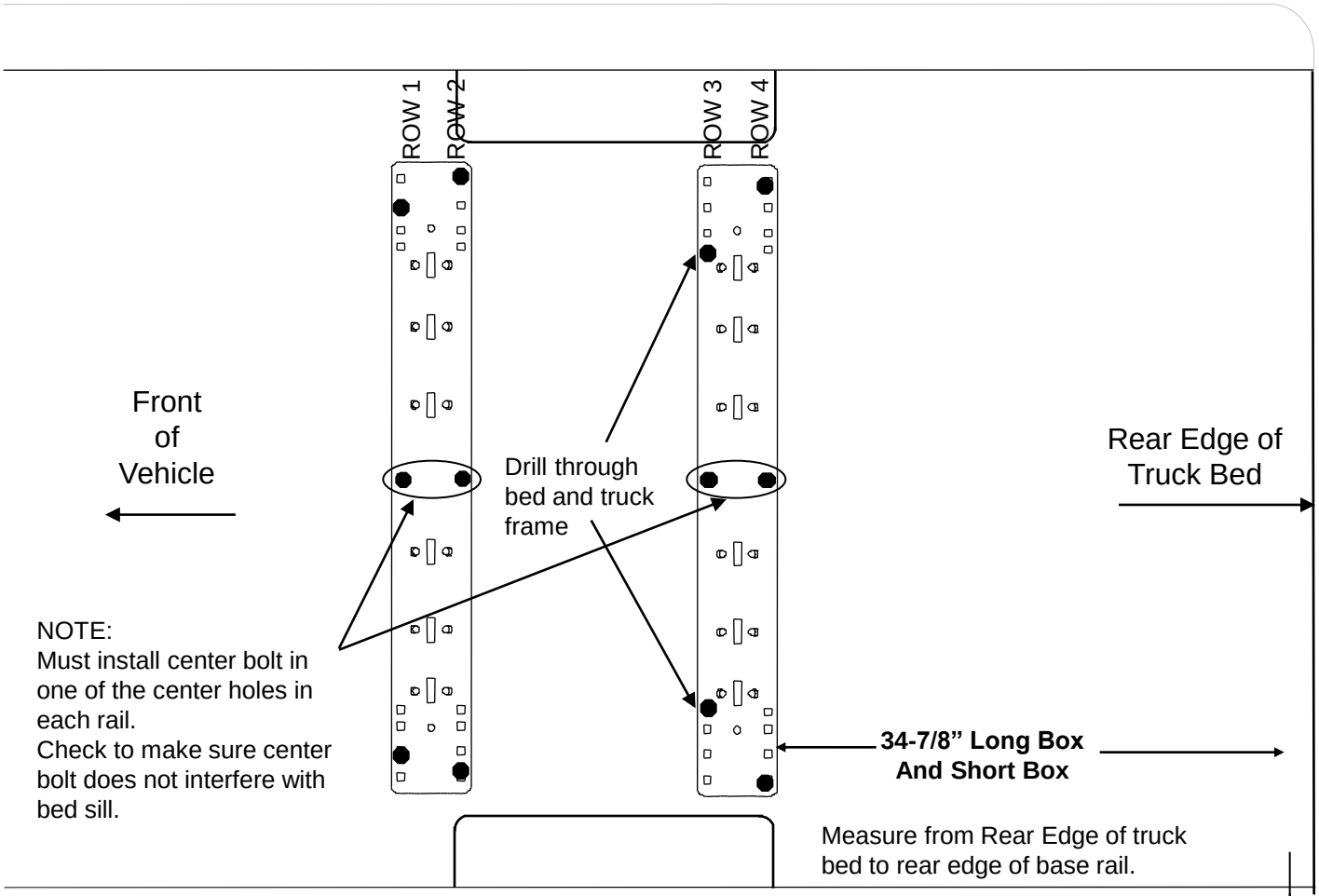

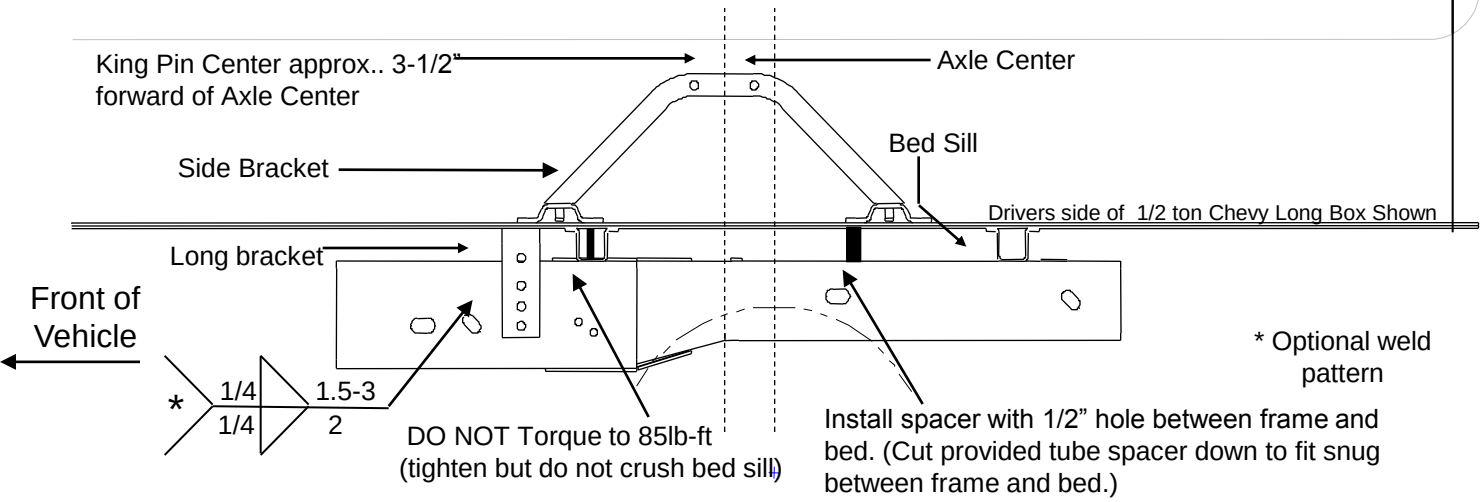

⚠ CAUTION! ⚠

Check for obstructions before drilling. Failure to do so could result in damaged fuel or brake lines, structural members, etc. CEQUENT PERFORMANCE PRODUCTS, INC. does its best to communicate tow vehicle manufacturer changes; however, it is ultimately the responsibility of the installer to prevent damage due to installation.

Chevrolet 73 to 87 / 73 to 92 4-door (GMC) (34” Straight, with Inside Shock Absorbers)

⚠ CAUTION! ⚠

Read pages 2-3 of these instructions before starting installation. Failure to do so could result in significant vehicle damage!

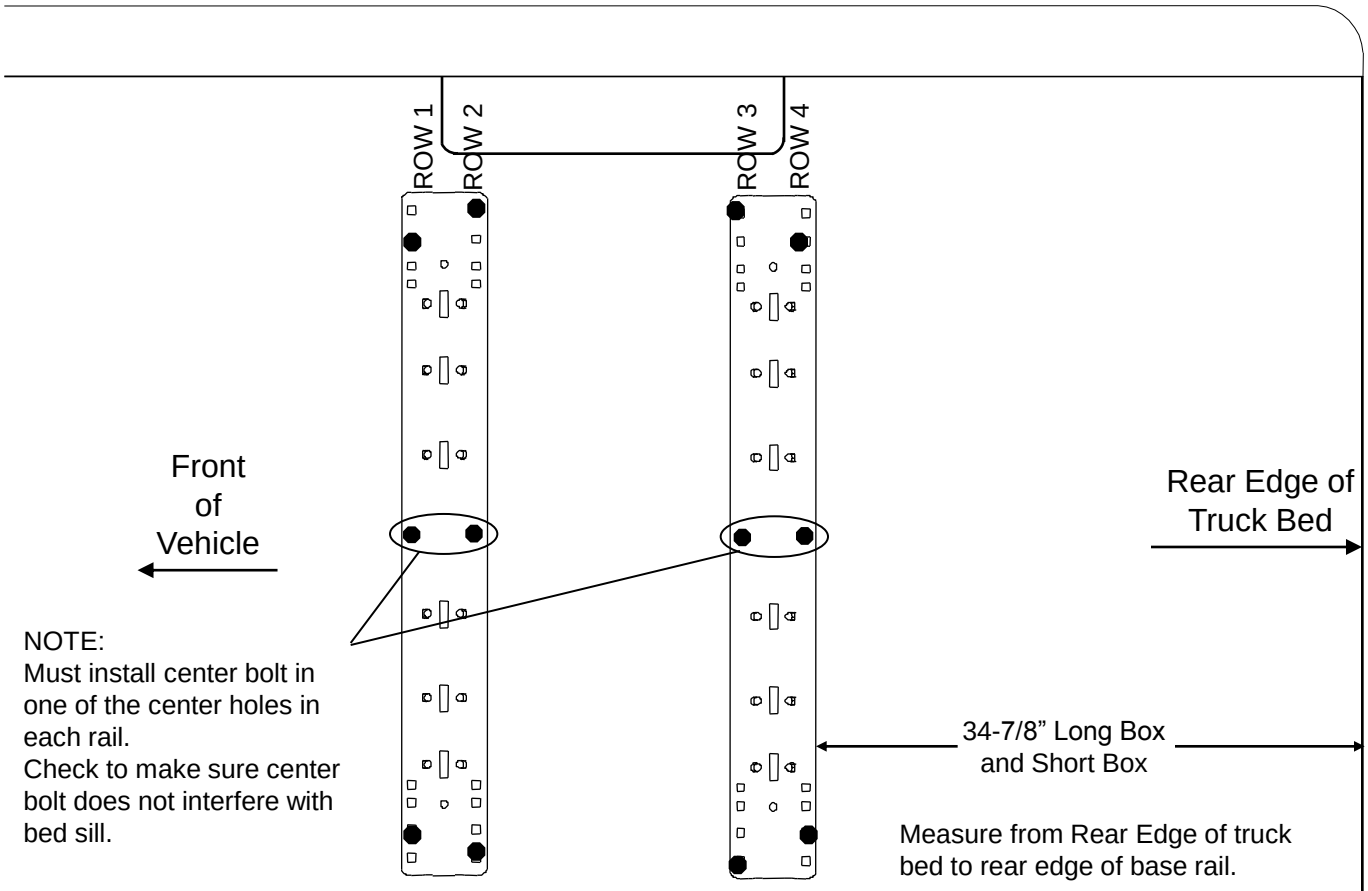

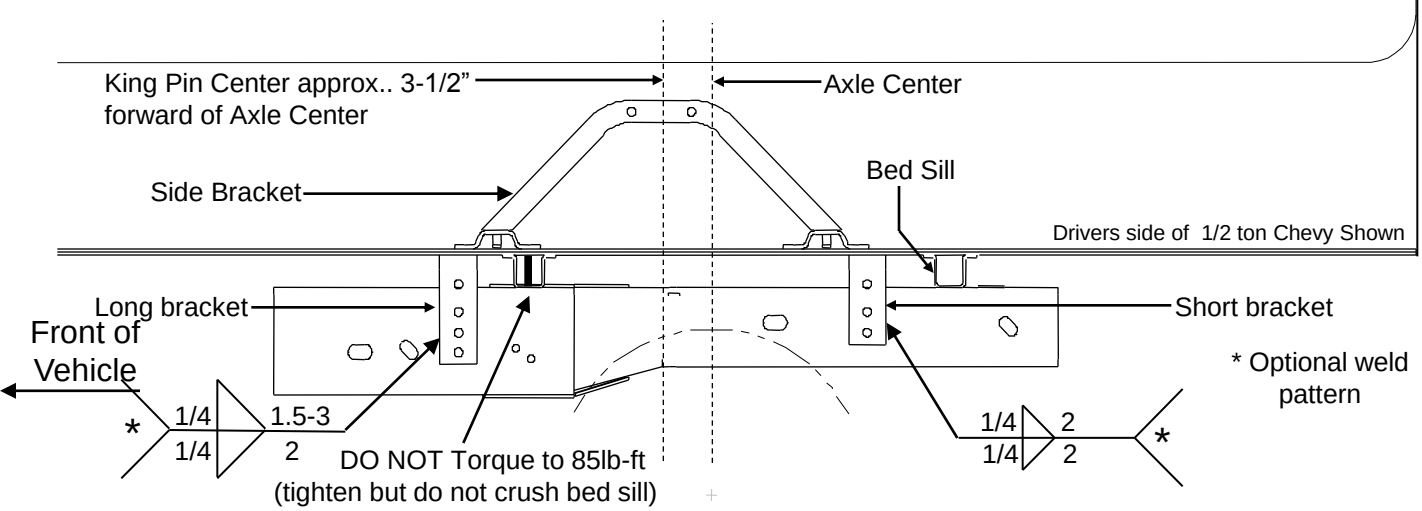

⚠ CAUTION! ⚠

Check for obstructions before drilling. Failure to do so could result in damaged fuel or brake lines, structural members, etc. CEQUENT PERFORMANCE PRODUCTS, INC. does its best to communicate tow vehicle manufacturer changes; however, it is ultimately the responsibility of the installer to prevent damage due to installation.

Ford '04 & UP F-150, 5.5', 6', & 8' BEDS - requires Bracket Kit 58426

⚠ CAUTION! ⚠

Read pages 2-3 of these instructions before starting installation. Failure to do so could result in significant vehicle damage!

IMPORTANT NOTES FOR THIS INSTALLATION:

1. Do not drill through both walls of frame. Drill only through wall of frame to which bracket is mounted.
2. Find parallel rows of bed sill spot welds in bed of truck. No drilling should be done in the ~4" between parallel rows of spot welds where the bed sill sits.
3. Remove jounce block from bottom of frame on both sides.
4. When brackets are in place one of the front 2 holes should line up with a hole in the frame. A hole will need to be drilled in the frame at the rearward bracket hole.
5. Pull carriage bolts with bolt plates (using supplied pull wire) through the hole in the bottom of frame (where the jounce block was removed) and through the rear hole in each bracket. On the forward brackets a carriage bolt, bolt plate and a 1" washer should be pulled through the forward hole, rearward brackets a carriage bolt, bolt plate and 13/16" washer.
6. Replace the jounce block.

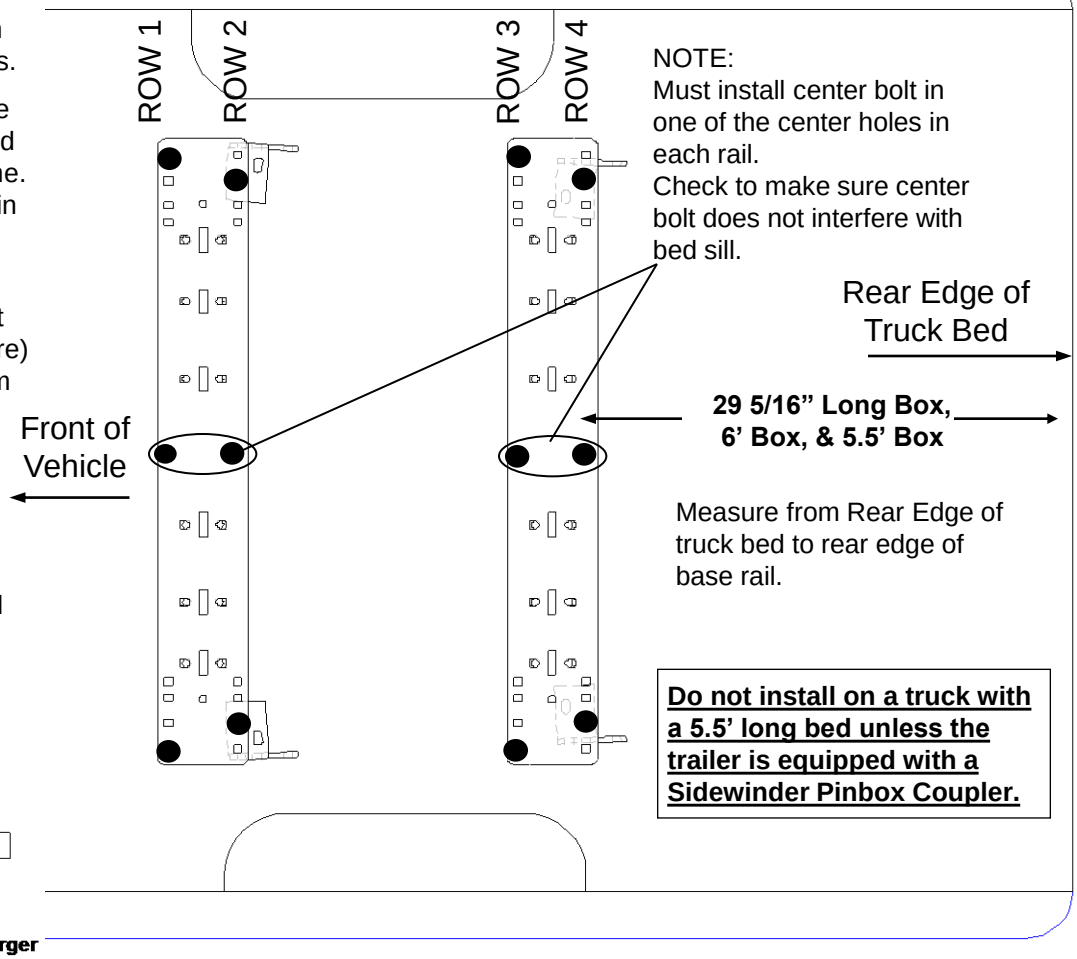

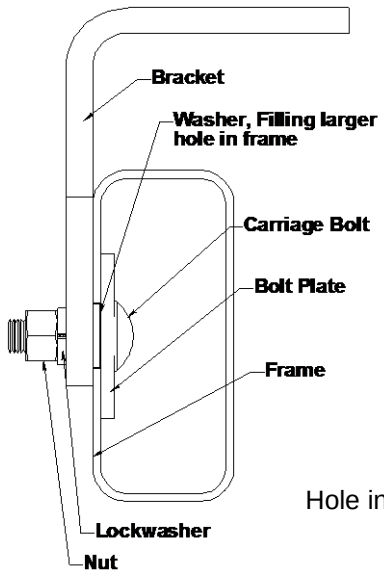

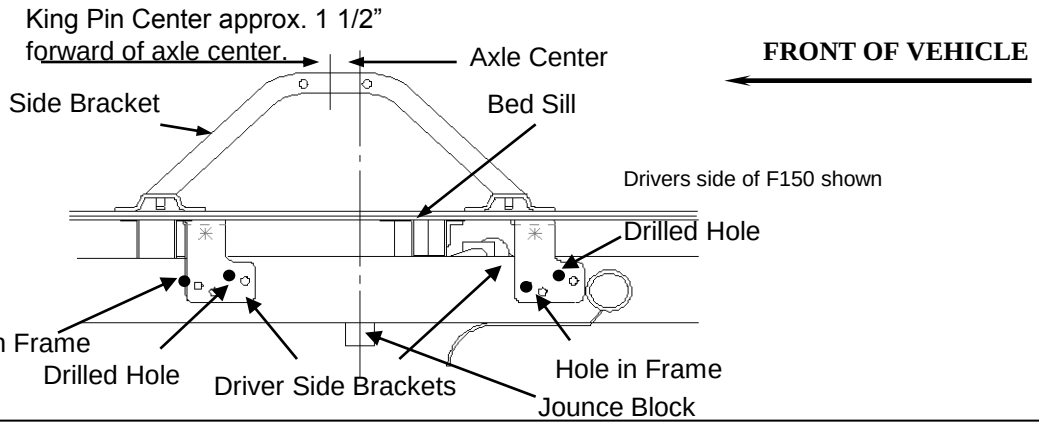

⚠ CAUTION! ⚠

Check for obstructions before drilling. Failure to do so could result in damaged fuel or brake lines, structural members, etc. CEQUENT PERFORMANCE PRODUCTS, INC. does its best to communicate tow vehicle manufacturer changes; however, it is ultimately the responsibility of the installer to prevent damage due to installation.

Ford '97 to '03 F-150 & F-250 8500 GVW AND UNDER and '04 Heritage Series Body Style

⚠ CAUTION! ⚠

Read pages 2-3 of these instructions before starting installation. Failure to do so could result in significant vehicle damage!

IMPORTANT NOTES FOR THIS INSTALLATION:

1. Long and Short Brackets on Driver's Side may need to be switched to avoid interference with exhaust hanger.
2. May need to move base rail location +/- 1/2" to ensure frame brackets do not interfere with bed sills.

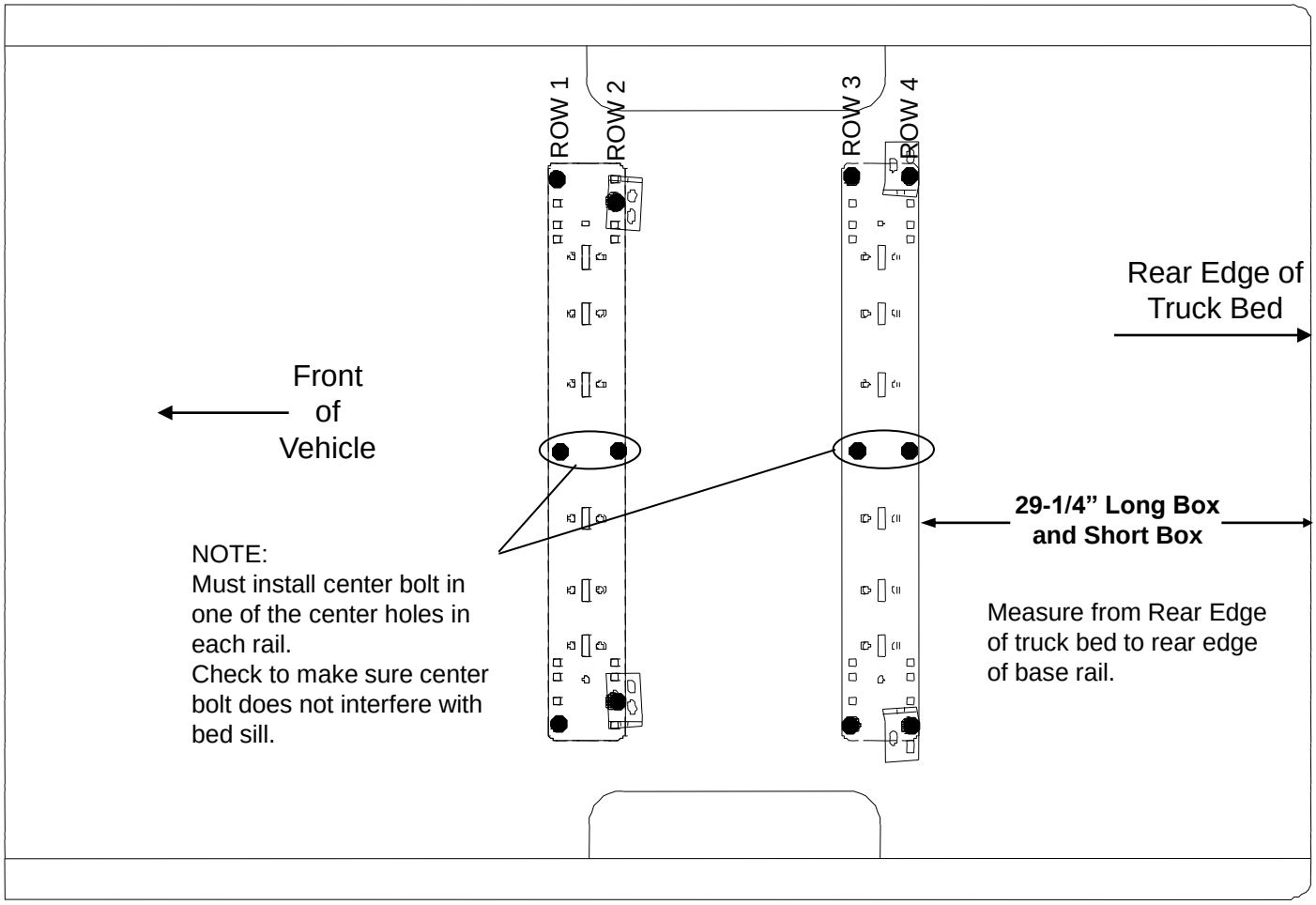

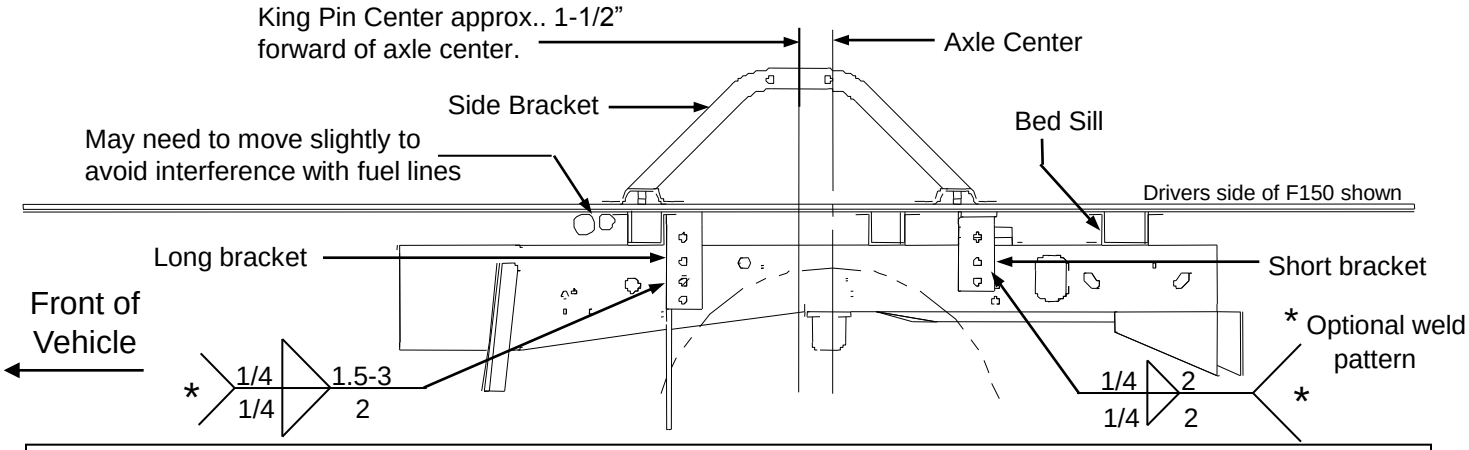

⚠ CAUTION! ⚠

Check for obstructions before drilling. Failure to do so could result in damaged fuel or brake lines, structural members, etc. CEQUENT PERFORMANCE PRODUCTS, INC. does its best to communicate tow vehicle manufacturer changes; however, it is ultimately the responsibility of the installer to prevent damage due to installation.

© 2006,2007,2008,2009,2010,2011,2012,2013, 2014 Cequent Performance Products, Inc.
Made in China

FORD F-150 & F-250 THROUGH ’96 / ‘97 F-250 OVER 8500 GVW, F350 THROUGH ’97 / 1999 & NEWER F-250 / F-350 & F-450 SUPERDUTY PICKUPS (Not Cab-On-Chassis)

⚠ CAUTION! ⚠

Read pages 2-3 of these instructions before starting installation. Failure to do so could result in significant vehicle damage!

IMPORTANT NOTES FOR THIS INSTALLATION:

1. On short bed vehicles, attach Driver’s Side forward bracket on Row 2 to avoid interference with fuel lines.
2. On vehicles with overload springs, switch position of long and short brackets.
3. May need to move base rail location +/- 1/2” to ensure frame brackets do not interfere with bed sills.

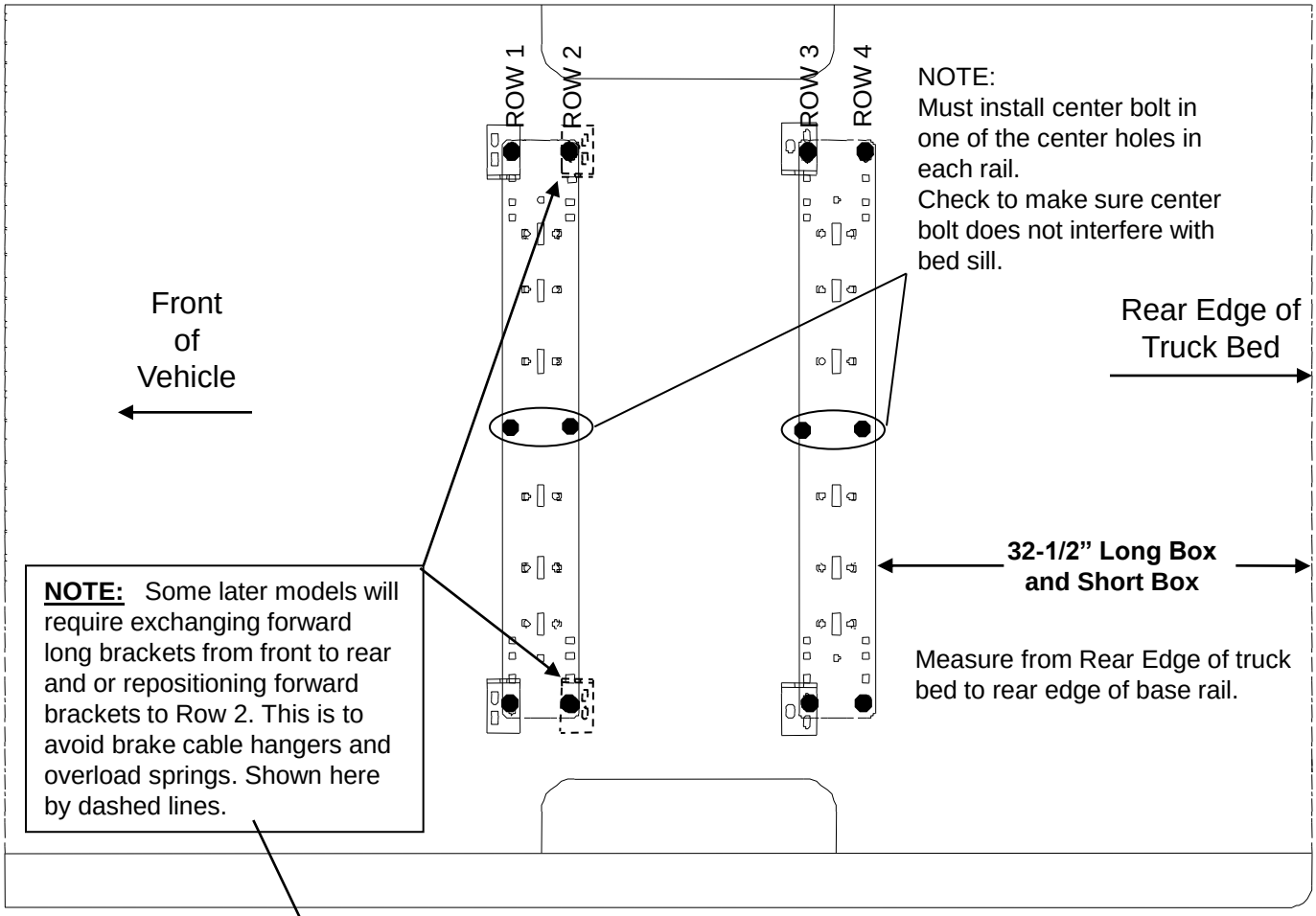

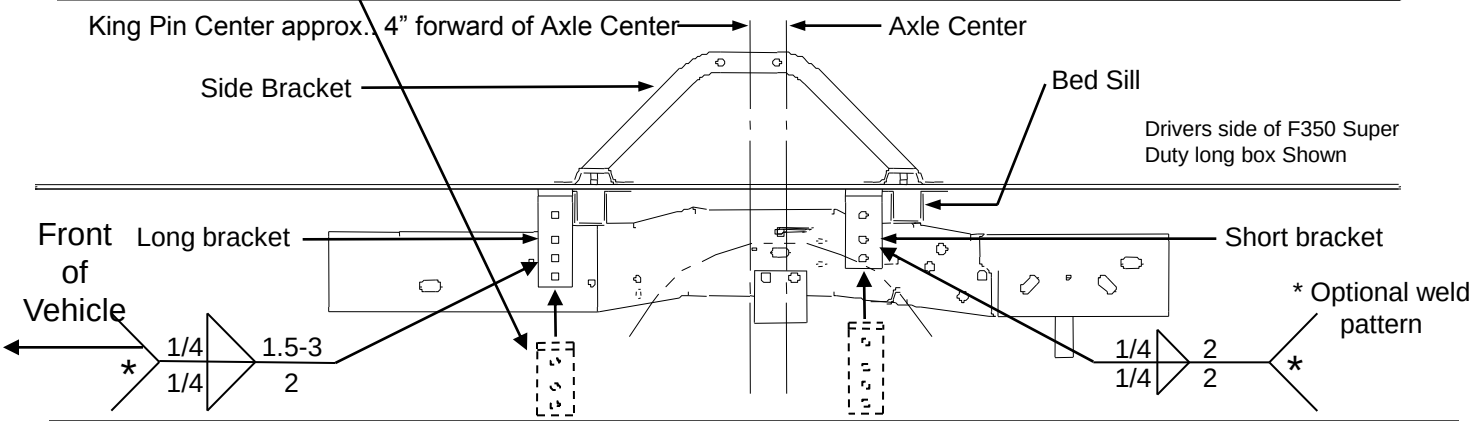

⚠ CAUTION! ⚠

Check for obstructions before drilling. Failure to do so could result in damaged fuel or brake lines, structural members, etc. CEQUENT PERFORMANCE PRODUCTS, INC. does its best to communicate tow vehicle manufacturer changes; however, it is ultimately the responsibility of the installer to prevent damage due to installation.

2009 & UP-DODGE(RAM)1500, INCLUDING CREWCAB (USE REQUIRED BRACKET KIT 58386)

⚠ CAUTION! ⚠

Read pages 2-3 of 30035 instructions before starting installation. Failure to do so could result in significant vehicle damage!

IMPORTANT NOTES FOR THIS INSTALLATION:

Use the 58386 service kit together with 30035 mounting kit.

1. Tube spacer and 4 1/2" carriage bolt used to attach through forward Bed Sill (Row 2).
2. **Rib neck bolts will need to be pulled through access holes in frame with supplied pull wire (see below).

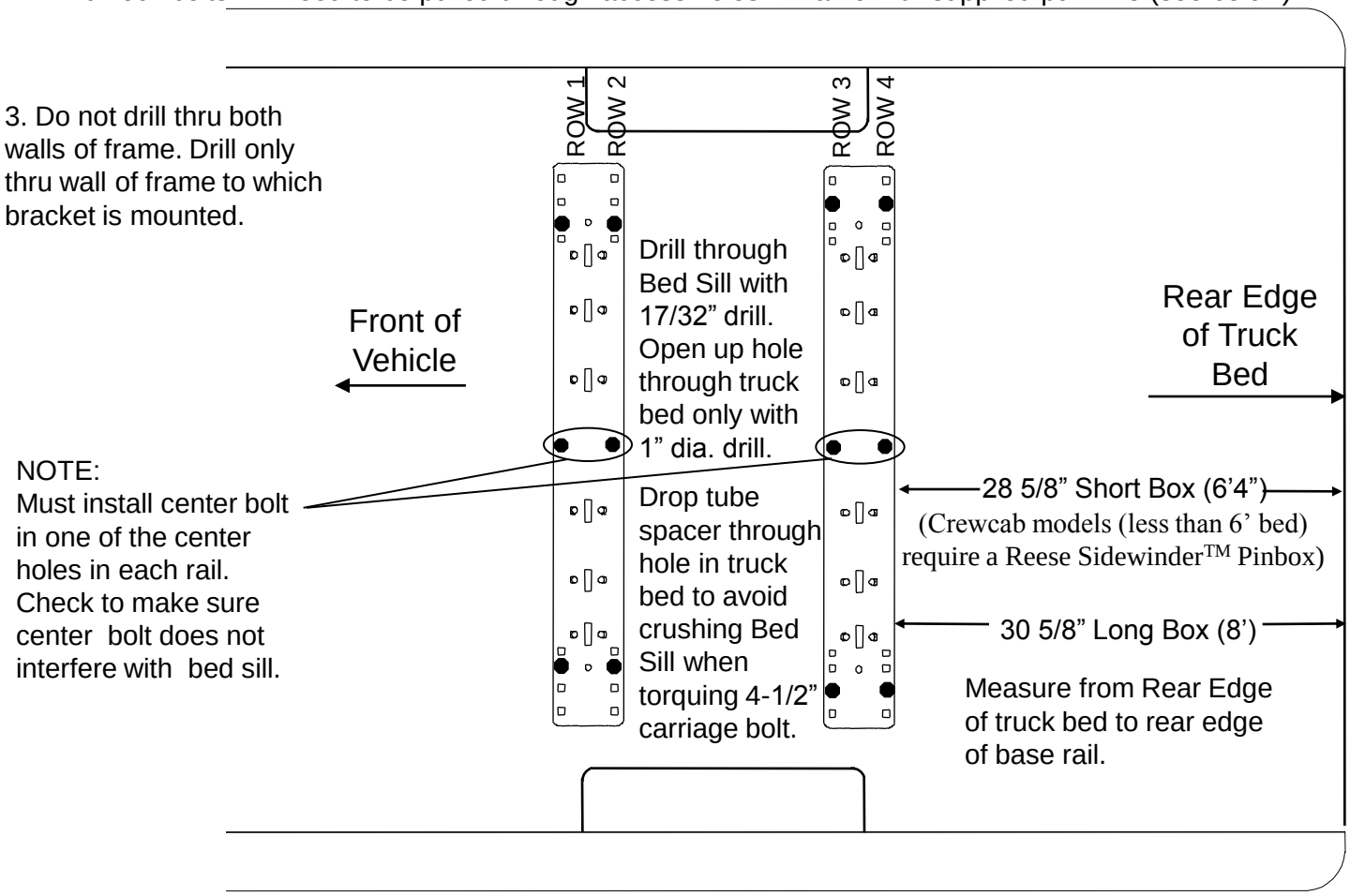

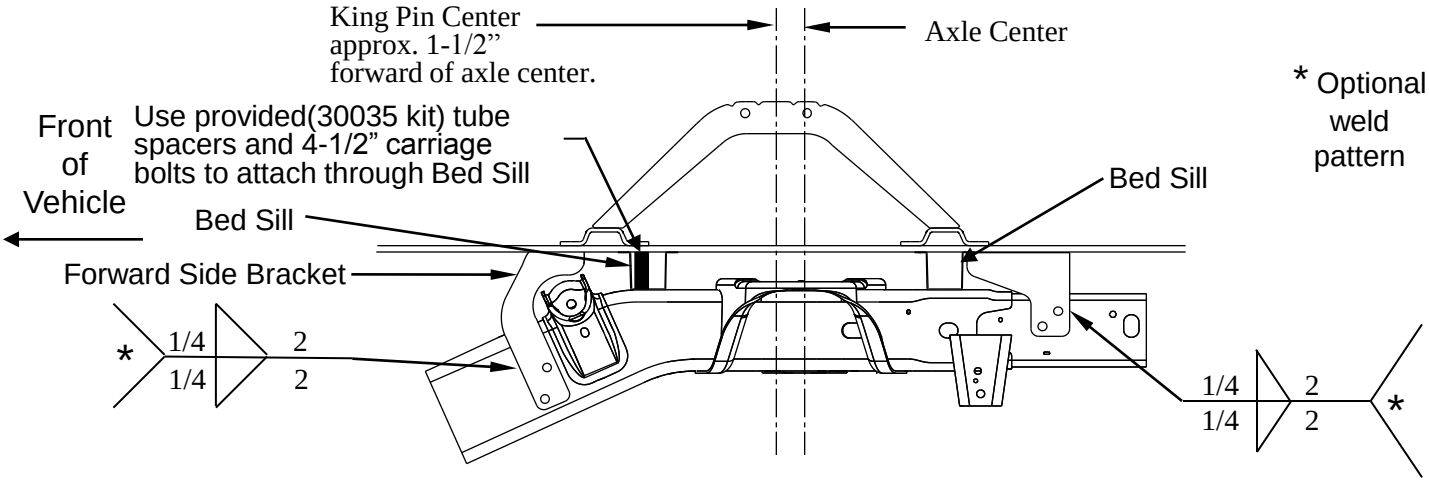

⚠ CAUTION! ⚠

Check for obstructions before drilling. Failure to do so could result in damaged fuel or brake lines, structural members, etc. CEQUENT PERFORMANCE PRODUCTS, INC. does its best to communicate tow vehicle manufacturer changes; however, it is ultimately the responsibility of the installer to prevent damage due to installation.

DODGE (RAM) '02-08' 1500 / '03-12' 2500 WITHOUT OVERLOAD BRACKETS ('03-12' 2500 WITH OVERLOAD AND 3500 REQUIRED BRACKET KIT 58186, See page 15)

⚠ CAUTION! ⚠

Read pages 2-3 of these instructions before starting installation. Failure to do so could result in significant vehicle damage!

IMPORTANT NOTES FOR THIS INSTALLATION:

1. Tube spacer and 4 1/2" carriage bolt used to attach through rearward Bed Sill (Row 3).
2. **Rib neck bolts will need to be pulled through access holes in frame with supplied pull wire (see below).
3. Do not drill through both walls of frame. Drill only through wall of frame to which bracket is mounted.
4. It is very important that brackets in Row 2 are against rear side of Bed Sill as shown. Due to dimensional instability in Bed Sill placement with the Dodge truck, interference could result when drilling in Row 3. Observe caution note below and double check all areas prior to drilling.
5. To avoid drilling inside of frame, (Passenger Side Row 3) Optional Custom Bracket (58023) can be purchased from your dealer if needed. The use of this bracket allows for drilling outside the frame and avoids exhaust hanger.
6. *Due to tubular frames having thinner walls than previous C channel frames, extra caution needs to be used when mounting with the optional welding.

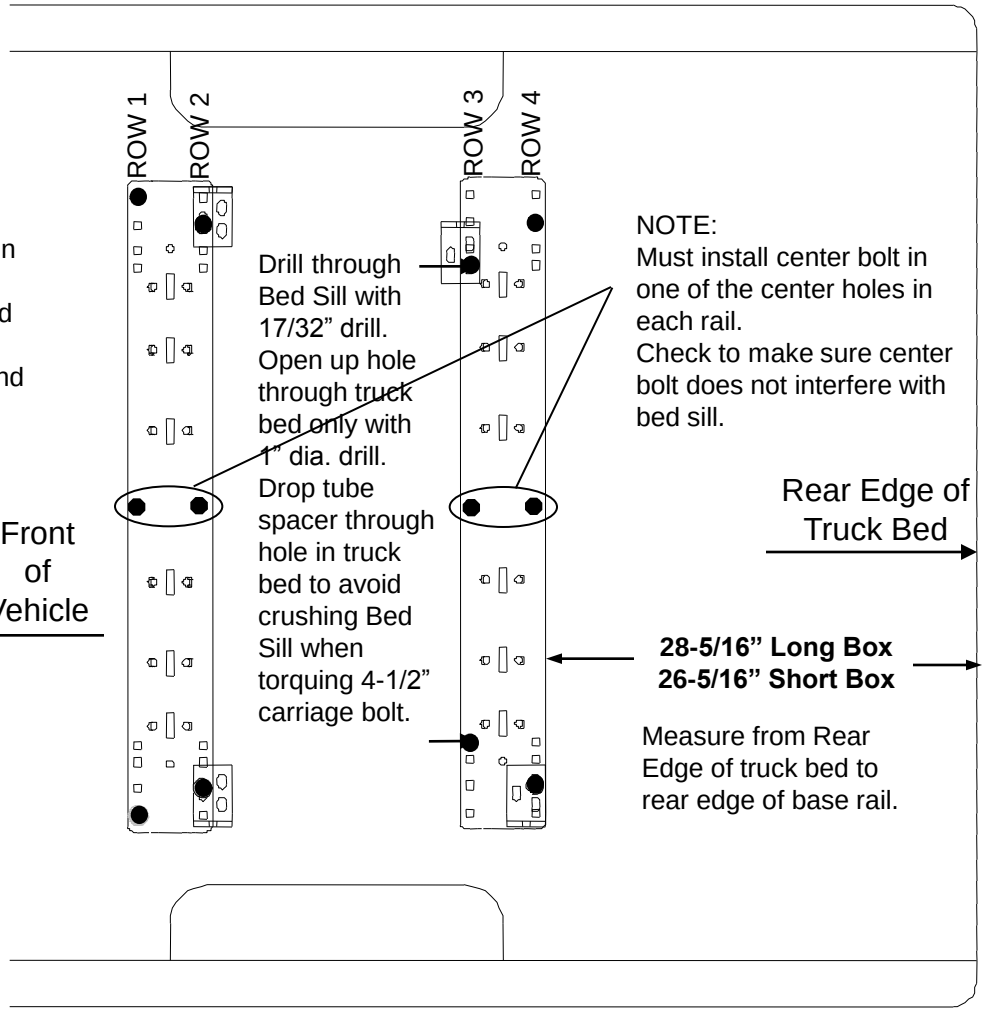

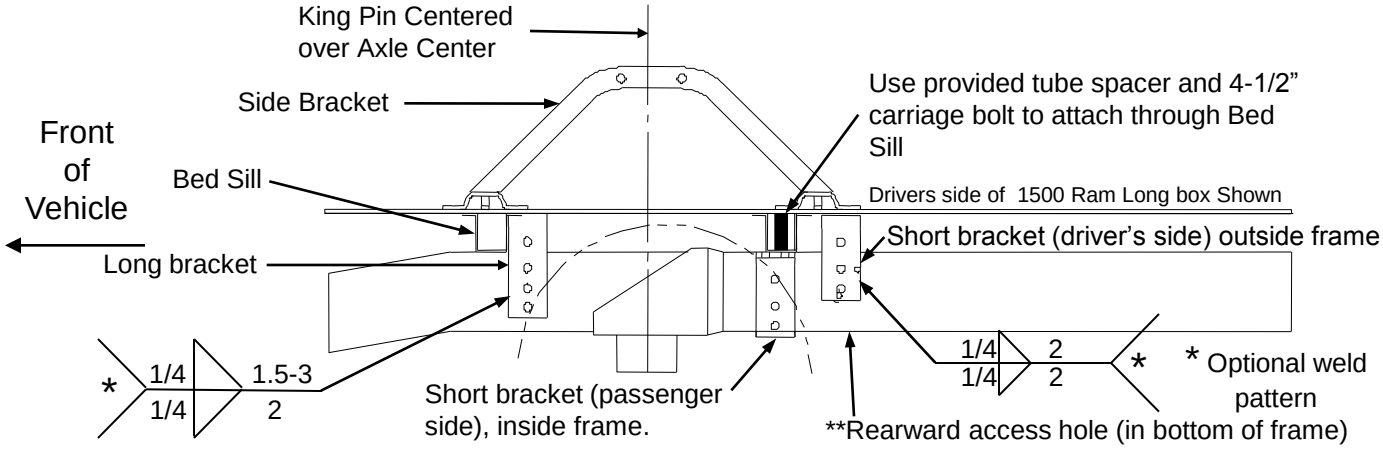

⚠ CAUTION! ⚠

Check for obstructions before drilling. Failure to do so could result in damaged fuel or brake lines, structural members, etc. CEQUENT PERFORMANCE PRODUCTS, INC. does its best to communicate tow vehicle manufacturer changes; however, it is ultimately the responsibility of the installer to prevent damage due to installation.

2013 RAM 2500 HD (Dodge/Chrysler) (without overload brackets)

⚠ CAUTION! ⚠

Read pages 2-3 of these instructions before starting installation. Failure to do so could result in significant vehicle damage!

IMPORTANT NOTES FOR THIS INSTALLATION:

1. Tube spacer and 4 1/2” carriage bolt used to attach through rearward Bed Sill (Row 3).
2. **Rib neck bolts will need to be pulled through access holes in frame with supplied pull wire (see below). Wire extensions will need to be added on to the pull wires for the forward rib bolts.
3. Do not drill through both walls of frame. Drill only through wall of frame to which bracket is mounted.
4. It is very important that brackets in Row 2 are close to rear side of Bed Sill as shown. Due to dimensional instability in Bed Sill placement with the Dodge truck, interference could result when drilling in Row 3. Observe caution note below and double check all areas prior to drilling.
5. *Due to tubular frames having thinner walls than previous C channel frames, extra caution needs to be used when mounting with the optional welding.

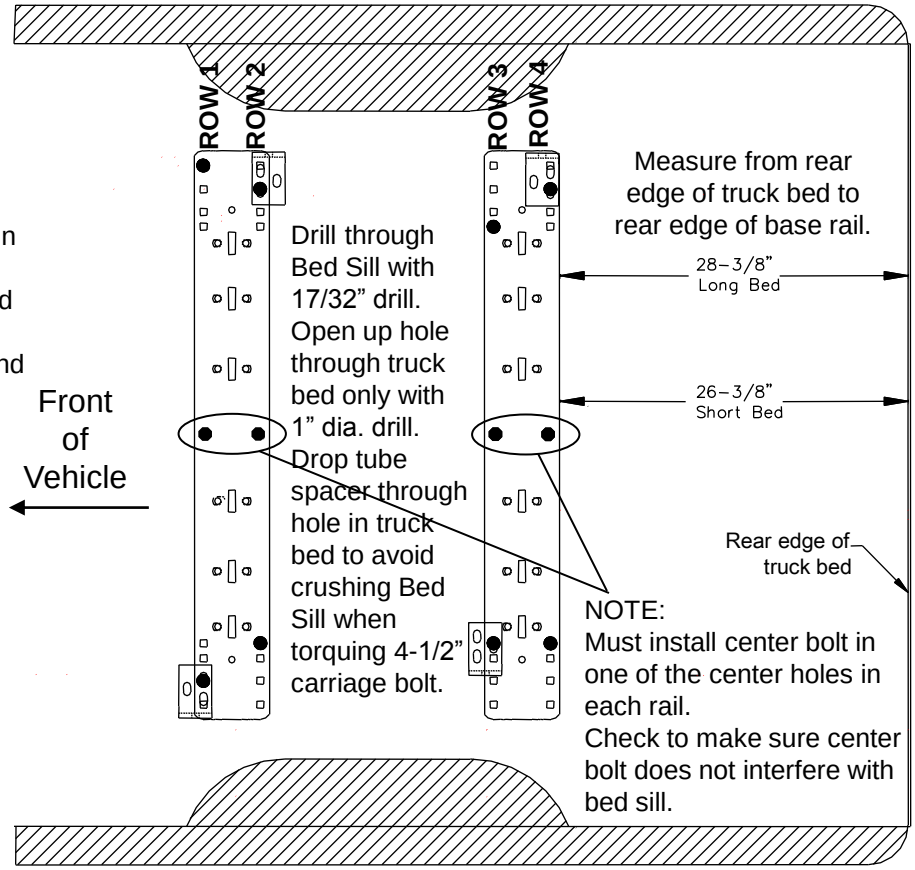

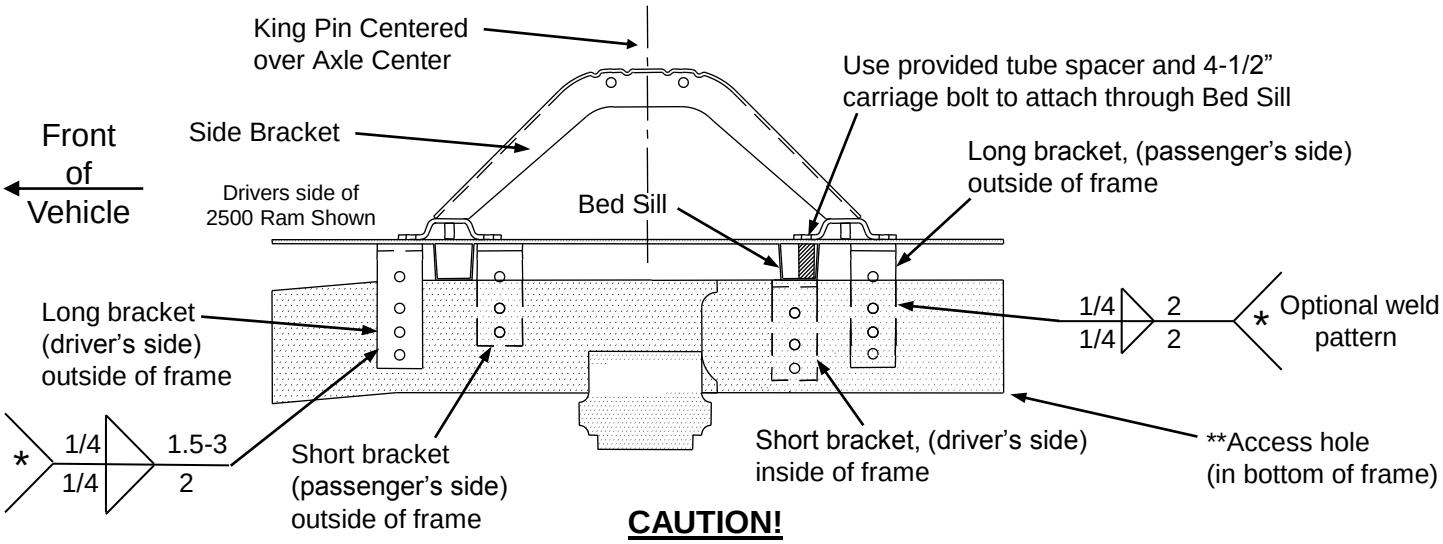

CAUTION!

Check for obstructions before drilling. Failure to do so could result in damaged fuel or brake lines, structural members, etc. CEQUENT PERFORMANCE PRODUCTS, INC. does its best to communicate tow vehicle manufacturer changes; however, it is ultimately the responsibility of the installer to prevent damage due to installation.

© 2006,2007,2008,2009,2010,2011,2012,2013, 2014 Cequent Performance Products, Inc.
Made in China

2014-CURRENT RAM 2500 (REQUIRES 58522 BRACKET KIT)

⚠ CAUTION! ⚠

Read pages 2-3 of 30035 instructions before starting installation. Failure to do so could result in significant vehicle damage!

IMPORTANT NOTES FOR THIS INSTALLATION:

1. Tube spacers and 4.5” carriage bolts used to attach through forward Bed Sill (Row 3).
2. Rib neck bolts will need to be pulled through rearward access holes in frame with supplied pull wire.
3. Do not drill thru both walls of frame. Drill only thru wall of frame to which bracket is mounted.
4. Due to dimensional instability in Bed Sill placement with the Ram truck, interference could result when drilling in Row 3. Observe caution note below and double check all areas prior to drilling.
5. Forward brackets can be mounted to the frame in the existing threaded holes using a conical washer and the M12 40mm Bolts supplied. Torque to 92 Ft.-Lbs.
6. The .250” x 1” x 3” block supplied with this kit will be placed under the front brackets between the bracket and washer on the rear end of the bracket.
7. *Due to tubular frames having thinner walls than previous C channel frames, extra caution needs to be used when mounting with the optional welding.

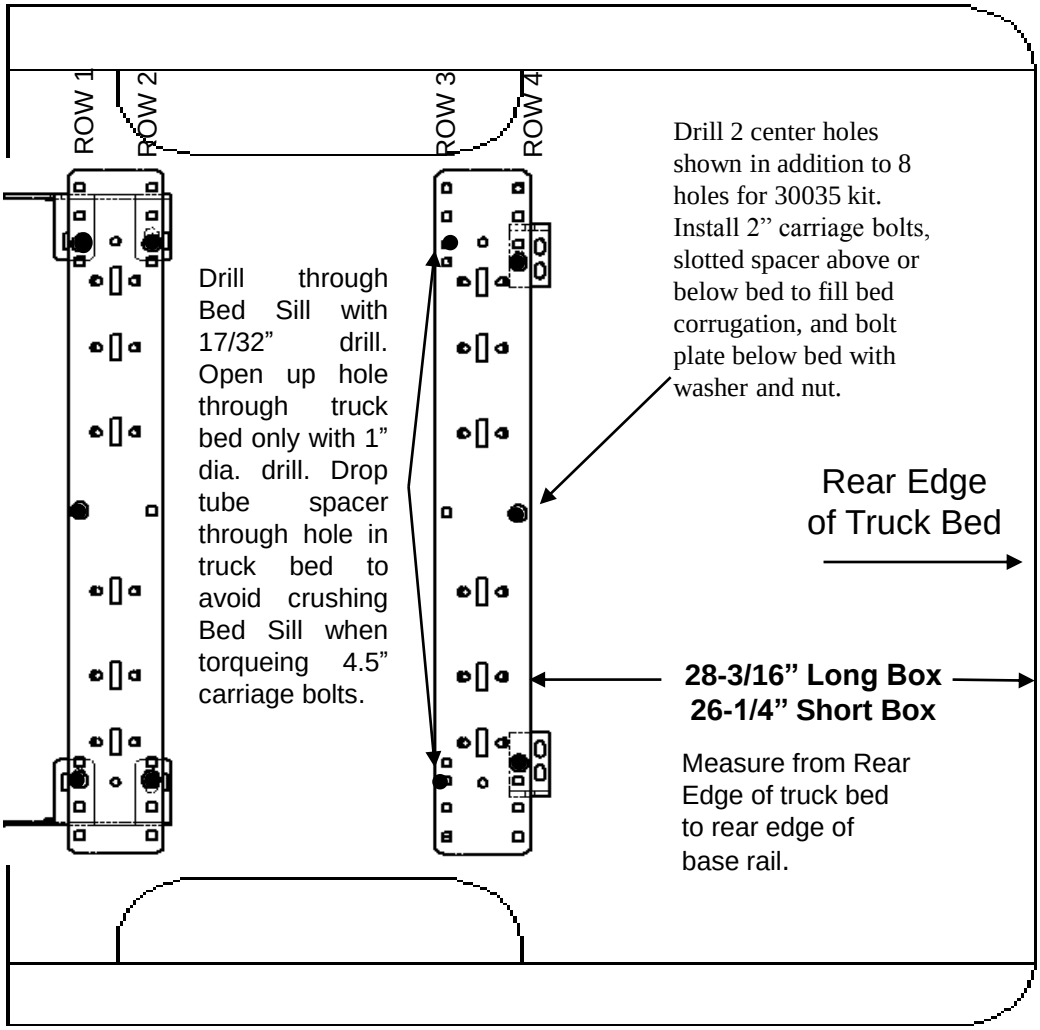

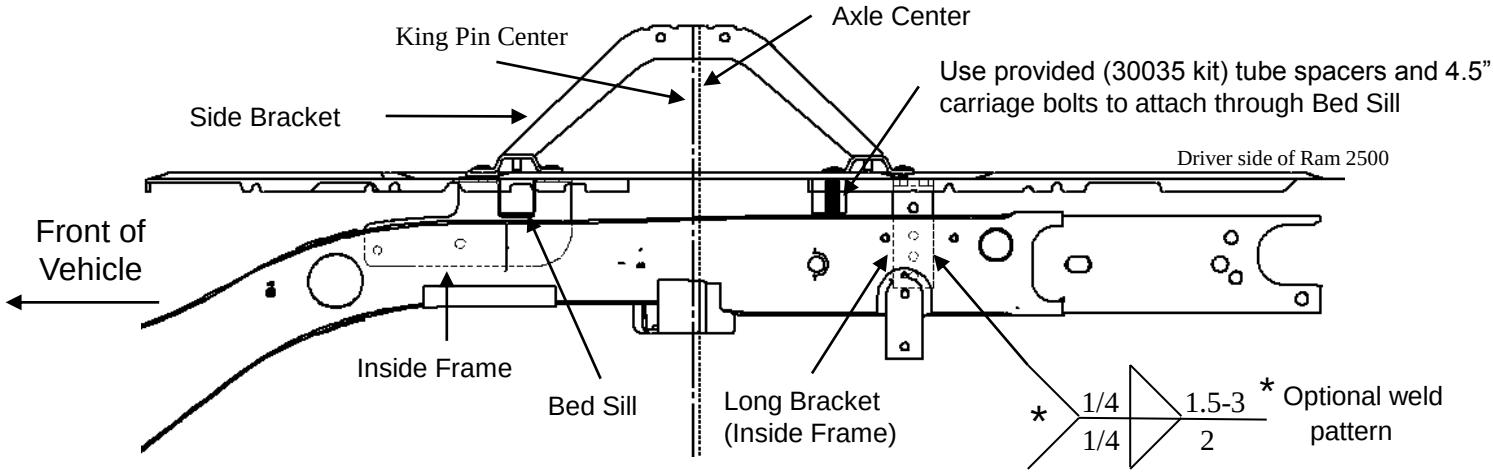

⚠ CAUTION! ⚠

Check for obstructions before drilling. Failure to do so could result in damaged fuel or brake lines, structural members, etc. CEQUENT PERFORMANCE PRODUCTS does its best to communicate tow vehicle manufacturer changes; however, it is ultimately the responsibility of the installer to prevent damage due to installation.

© 2006,2007,2008,2009,2010,2011,2012,2013, 2014 Cequent Performance Products, Inc.
Made in China

DODGE (RAM) '03-12' 2500 AND 3500 WITH OVERLOAD BRACKETS (REQUIRES 58186 BRACKET KIT)

⚠ CAUTION! ⚠

Read pages 2-3 of these instructions before starting installation. Failure to do so could result in significant vehicle damage!

IMPORTANT NOTES FOR THIS INSTALLATION:

1. Tube spacers and 4 1/2" carriage bolts used to attach through rearward Bed Sill (Row 3).
2. **Rib neck bolts will need to be pulled through rearward access holes in frame with supplied pull wire (see below).
3. Do not drill thru both walls of frame. Drill only thru wall of frame to which bracket is mounted.
4. It is very important that brackets in Row 2 are against rear side of Bed Sill as shown. Due to dimensional instability in Bed Sill placement with the Dodge truck, interference could result when drilling in Row 3. Observe caution note below and double check all areas prior to drilling.
5. Rear brackets can be mounted to frame with (2) bolts in any combination of the three bracket holes.
6. *Due to tubular frames having thinner walls than previous C channel frames, extra caution needs to be used when mounting with the optional welding.

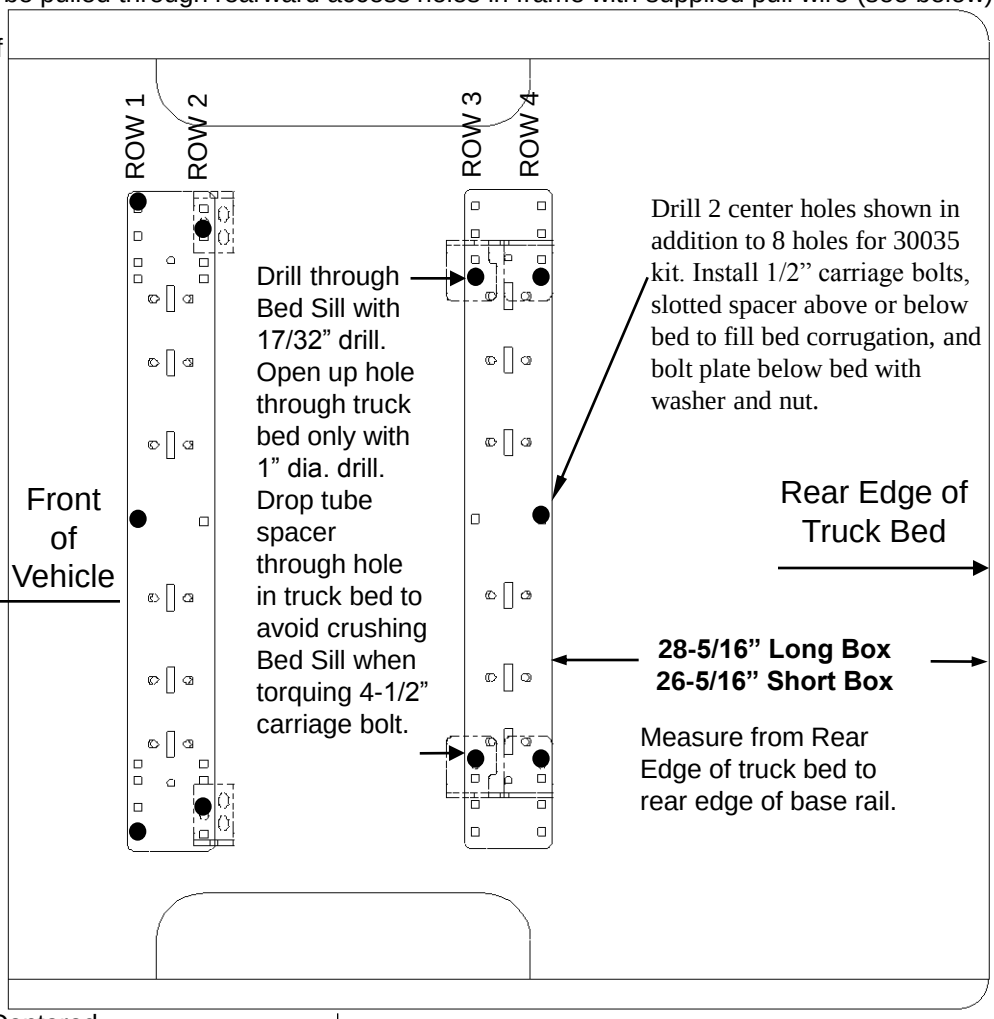

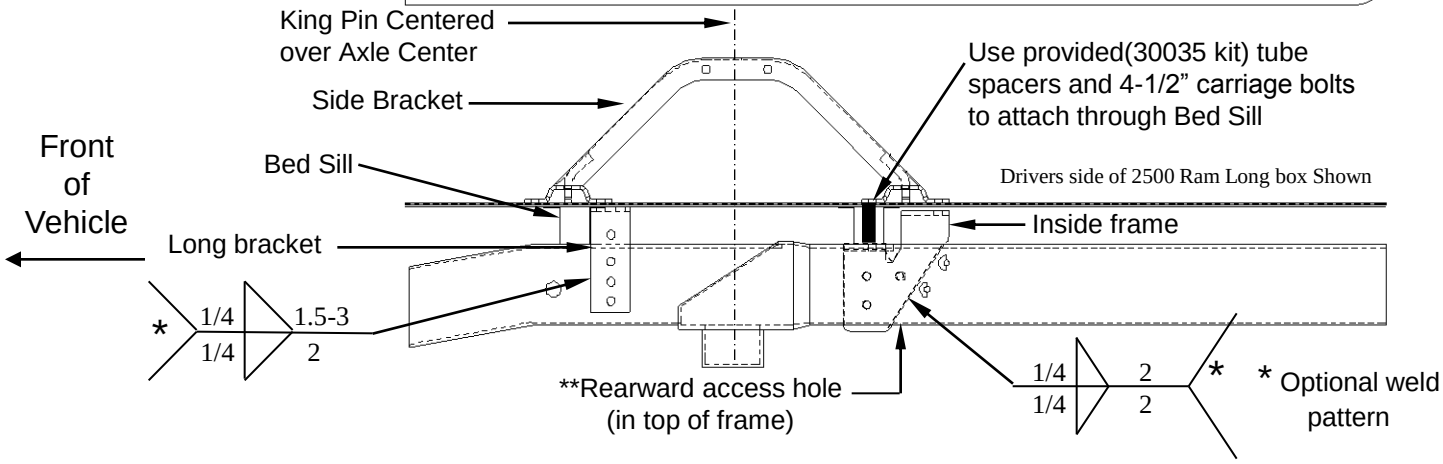

⚠ CAUTION! ⚠

Check for obstructions before drilling. Failure to do so could result in damaged fuel or brake lines, structural members, etc. CEQUENT PERFORMANCE PRODUCTS, INC. does its best to communicate tow vehicle manufacturer changes; however, it is ultimately the responsibility of the installer to prevent damage due to installation.

2013-CURRENT RAM 3500 (REQUIRES 58520 BRACKET KIT)

⚠ CAUTION! ⚠

Read pages 2-3 of 30035 instructions before starting installation. Failure to do so could result in significant vehicle damage!

IMPORTANT NOTES FOR THIS INSTALLATION:

1. Tube spacers and 4.5” carriage bolts used to attach through forward Bed Sill (Row 2).
2. Rib neck bolts will need to be pulled through rearward access holes in frame with supplied pull wire.
3. Do not drill thru both walls of frame. Drill only thru wall of frame to which bracket is mounted.
4. It is very important that brackets in Row 3 are against the forward side of the Bed Sill as shown. Due to dimensional instability in Bed Sill placement with the Ram truck, interference could result when drilling in Row 2. Observe caution note below and double check all areas prior to drilling.
5. Forward brackets can be clamped to the frame using the 4-3/8” U-Bolts supplied. Torque to 75 Ft.-Lbs. (Grade 5).
6. *Due to tubular frames having thinner walls than previous C channel frames, extra caution needs to be used when mounting with the optional welding.

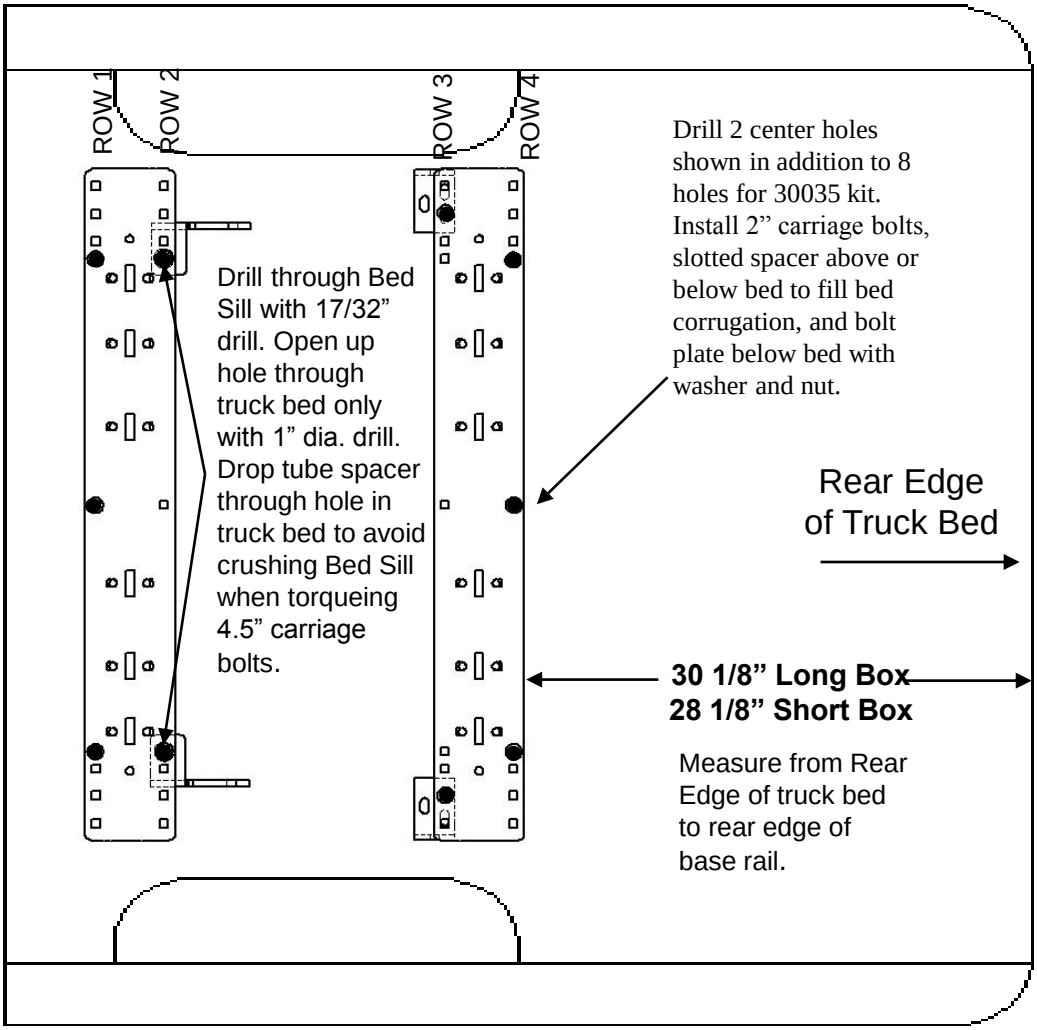

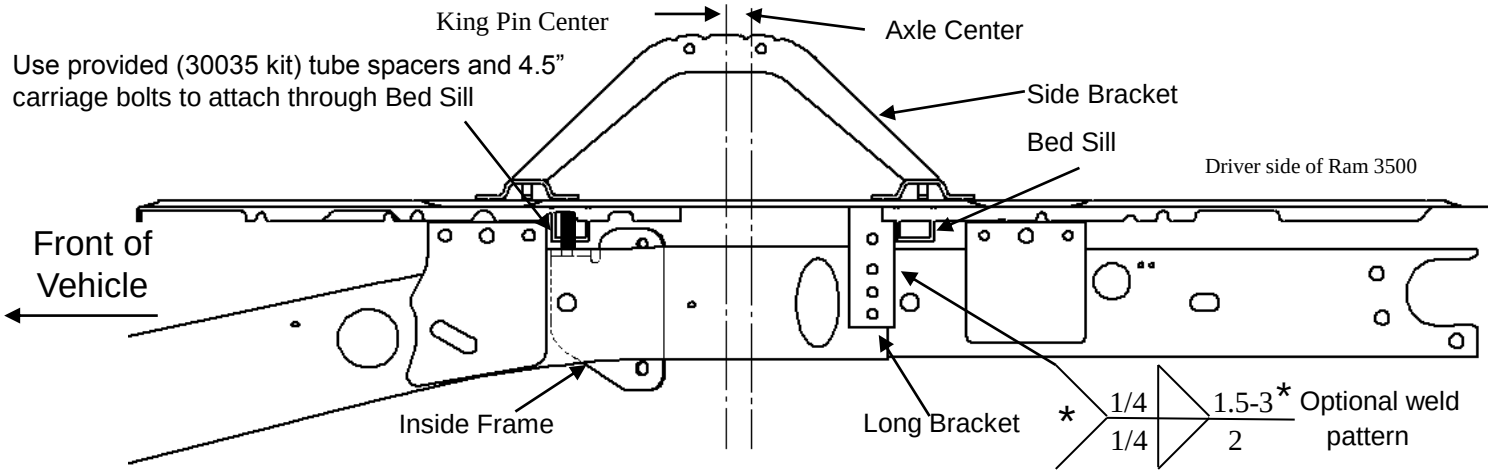

⚠ CAUTION! ⚠

Check for obstructions before drilling. Failure to do so could result in damaged fuel or brake lines, structural members, etc. CEQUENT PERFORMANCE PRODUCTS does its best to communicate tow vehicle manufacturer changes; however, it is ultimately the responsibility of the installer to prevent damage due to installation.

© 2006,2007,2008,2009,2010,2011,2012,2013, 2014 Cequent Performance Products, Inc.
Made in China

DODGE '94 to '01 1500 / '94 to '02 2500/3500 (FULL SIZE, SHORT AND LONG BOX)

⚠ CAUTION! ⚠

Read pages 2-3 of these instructions before starting installation. Failure to do so could result in significant vehicle damage!

IMPORTANT NOTES FOR THIS INSTALLATION:

1. It is very important that brackets in Row 2 are against forward side of bed sill as shown below. Due to dimensional instability in bed sill placement with the Dodge truck, interference could result when drilling in Rows 3 or 4. May need to move base rail location +/- 1/2" to ensure frame brackets do not interfere with bed sills.

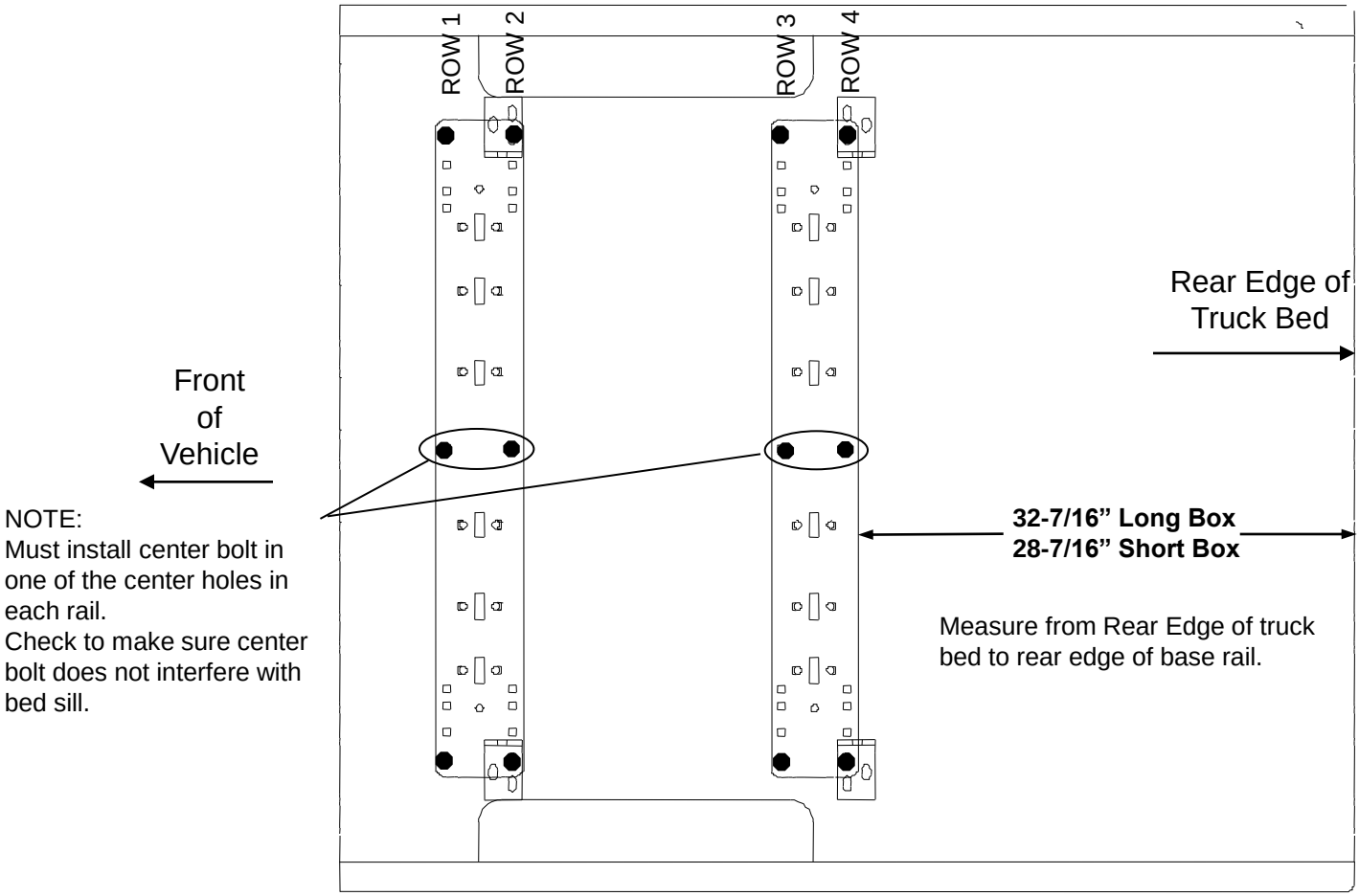

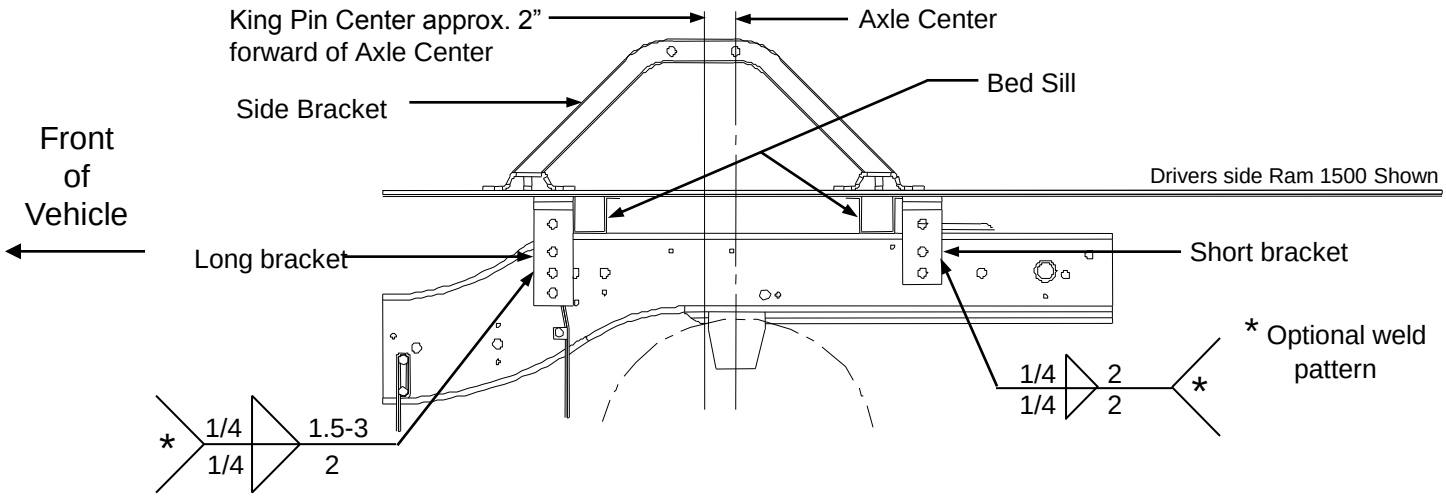

⚠ CAUTION! ⚠

Check for obstructions before drilling. Failure to do so could result in damaged fuel or brake lines, structural members, etc. CEQUENT PERFORMANCE PRODUCTS, INC. does its best to communicate tow vehicle manufacturer changes; however, it is ultimately the responsibility of the installer to prevent damage due to installation.

DODGE THROUGH 93 (FULL SIZE)

⚠ CAUTION! ⚠

Read pages 2-3 of these instructions before starting installation. Failure to do so could result in significant vehicle damage!

IMPORTANT NOTES FOR THIS INSTALLATION:

1. May need to move base rail location +/- 1/2” to ensure frame brackets do not interfere with bed sills.

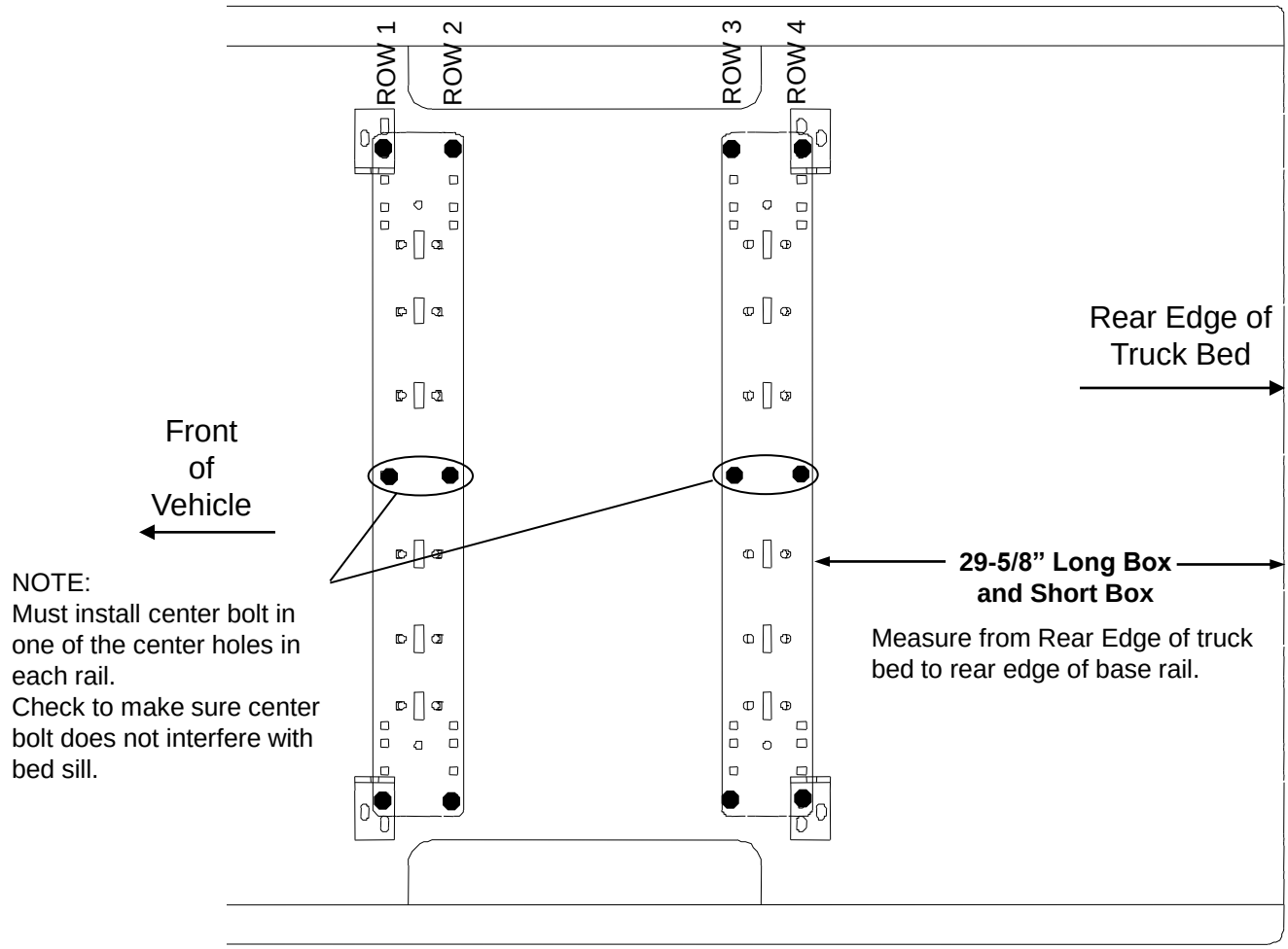

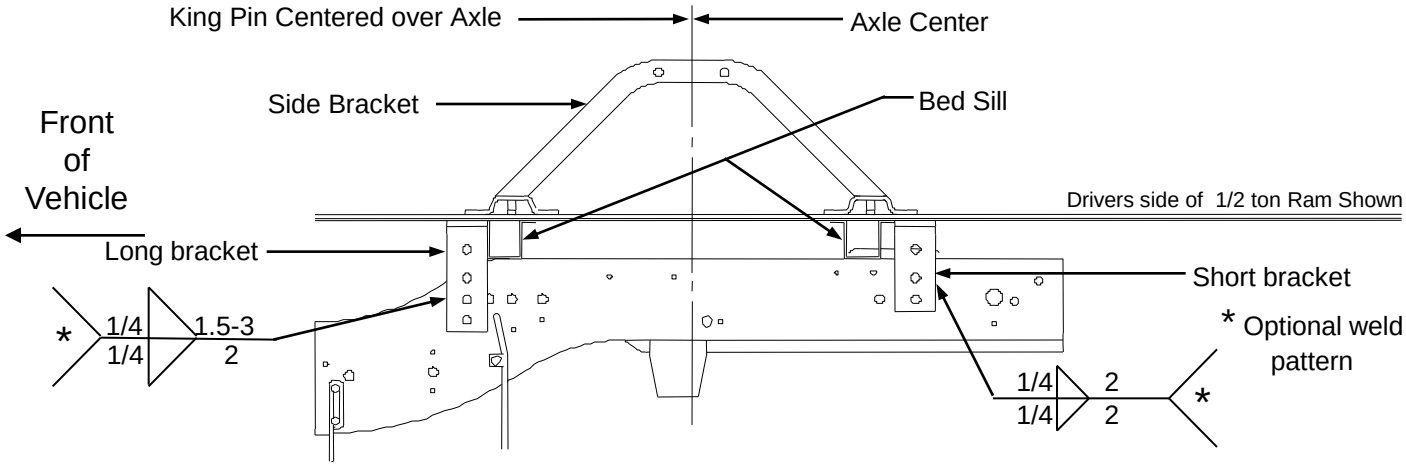

⚠ CAUTION! ⚠

Check for obstructions before drilling. Failure to do so could result in damaged fuel or brake lines, structural members, etc. CEQUENT PERFORMANCE PRODUCTS, INC. does its best to communicate tow vehicle manufacturer changes; however, it is ultimately the responsibility of the installer to prevent damage due to installation.

DODGE ’94 to 2004 DAKOTA

⚠ CAUTION! ⚠

Read pages 2-3 of these instructions before starting installation. Failure to do so could result in significant vehicle damage!

IMPORTANT NOTES FOR THIS INSTALLATION:

1. Find parallel rows of bed sill spot welds in bed of truck. No drilling should be done in the ~4” between parallel rows of spot welds where the bed sill sits.
2. Cut 1” from top flange of brackets. Under bed, mount brackets with flanges facing out.
3. Put rear brackets on Row 3 for ‘97 to Present models. Put brackets on Row 4 for ‘96 and Earlier models.

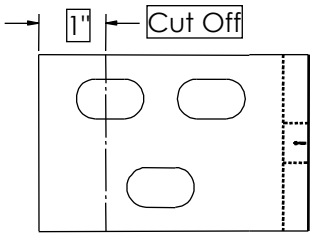

Frame Bracket

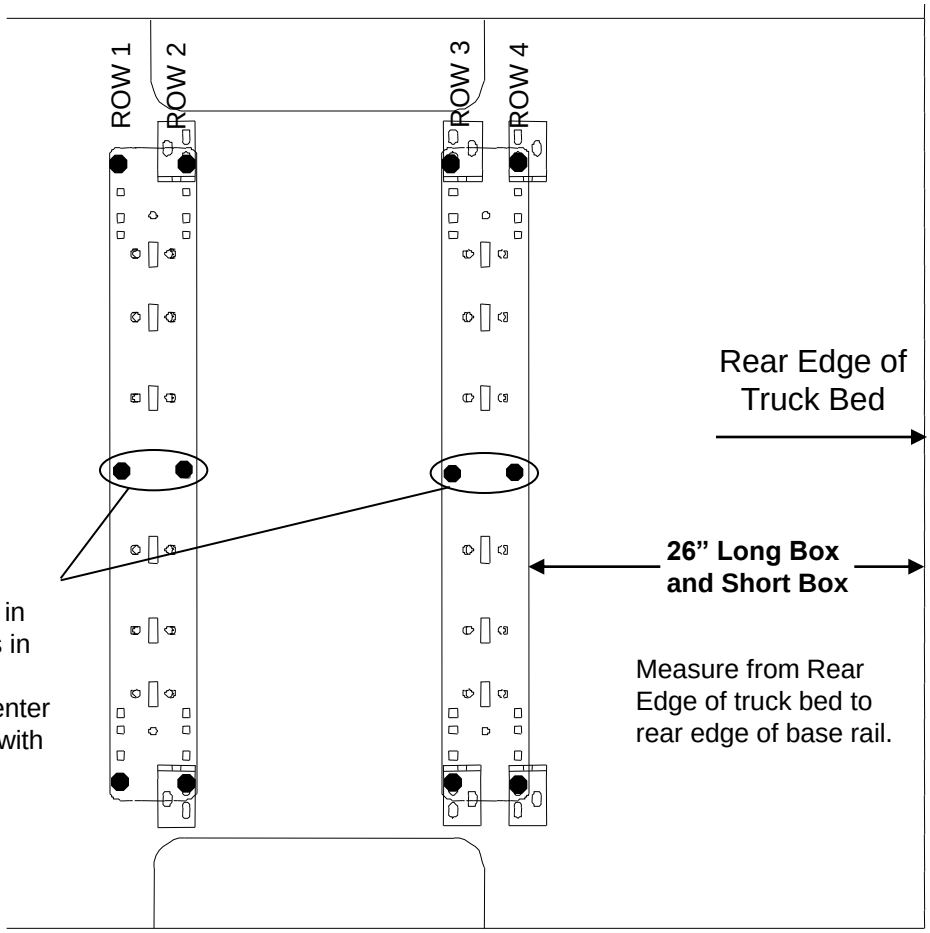

NOTE:
Must install center bolt in one of the center holes in each rail.
Check to make sure center bolt does not interfere with bed sill.

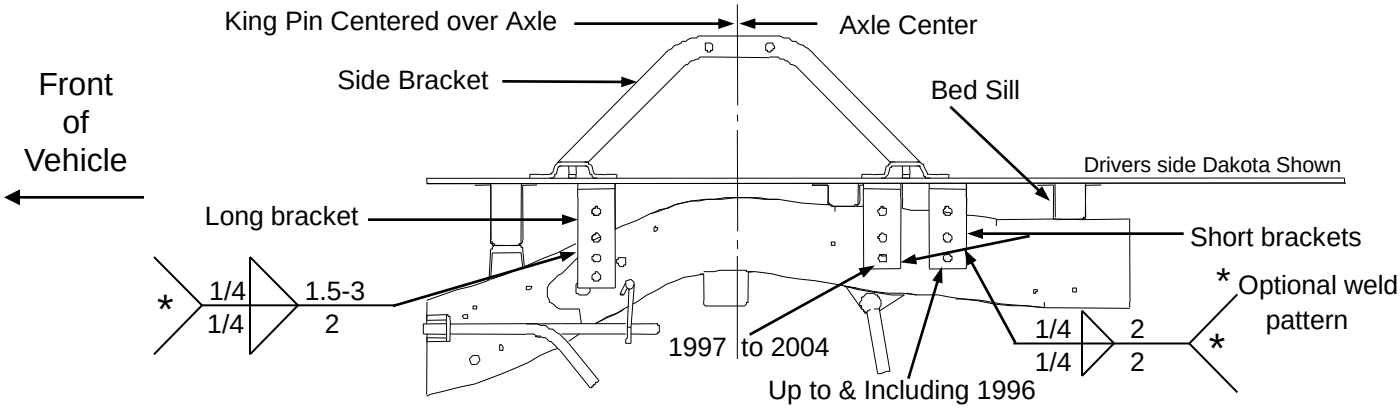

⚠ CAUTION! ⚠

Check for obstructions before drilling. Failure to do so could result in damaged fuel or brake lines, structural members, etc. CEQUENT PERFORMANCE PRODUCTS, INC. does its best to communicate tow vehicle manufacturer changes; however, it is ultimately the responsibility of the installer to prevent damage due to installation.

TOYOTA TUNDRA 2000 to 2006 (STANDARD CAB LONG BOX ONLY)

⚠ CAUTION! ⚠

Read pages 2-3 of these instructions before starting installation. Failure to do so could result in significant vehicle damage!

NOTE: For Toyota Tundra application, part #58197 spacer kit is required. Stack (1) 3/16" and (1) 5/16" thick slotted spacer to avoid crushing of truck bed.

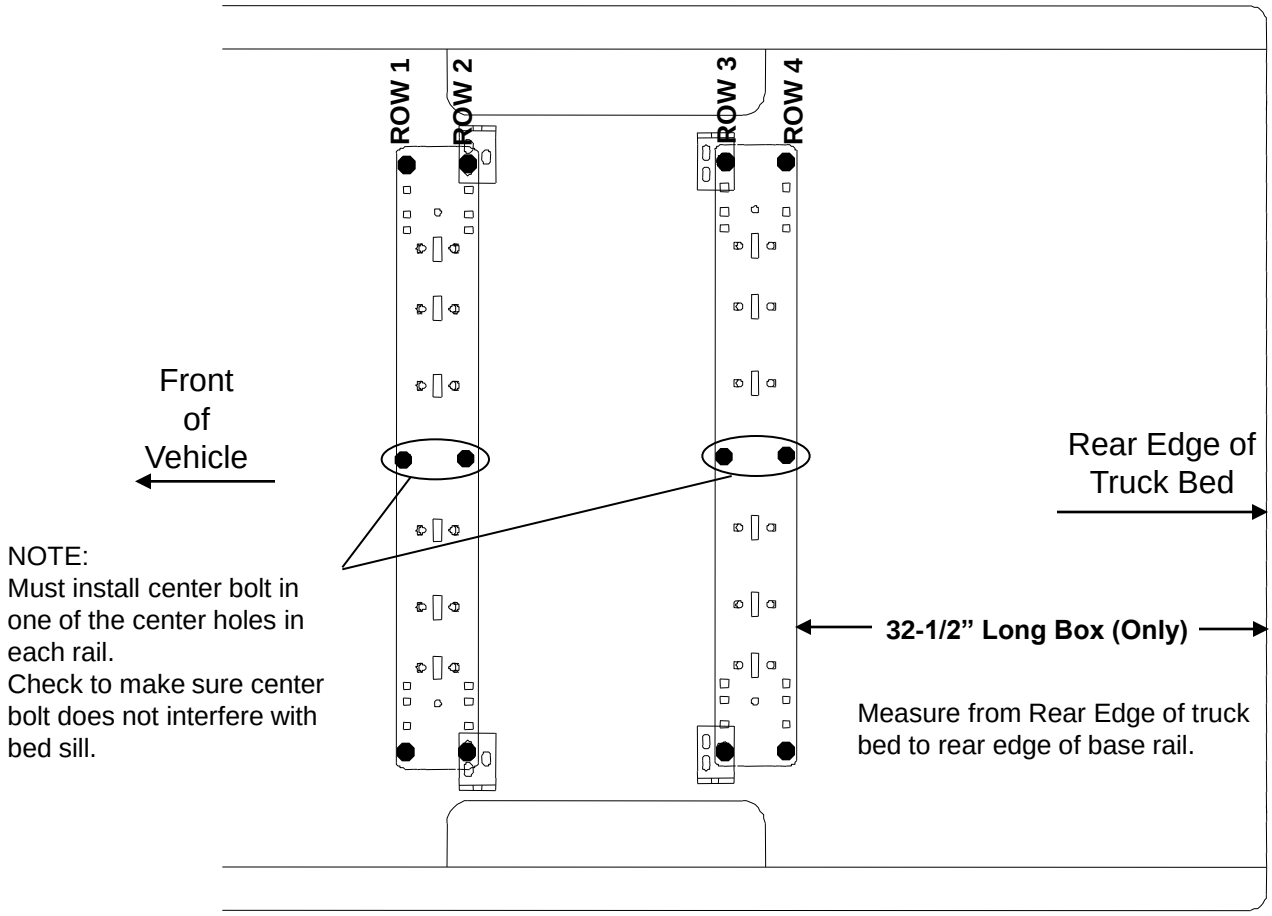

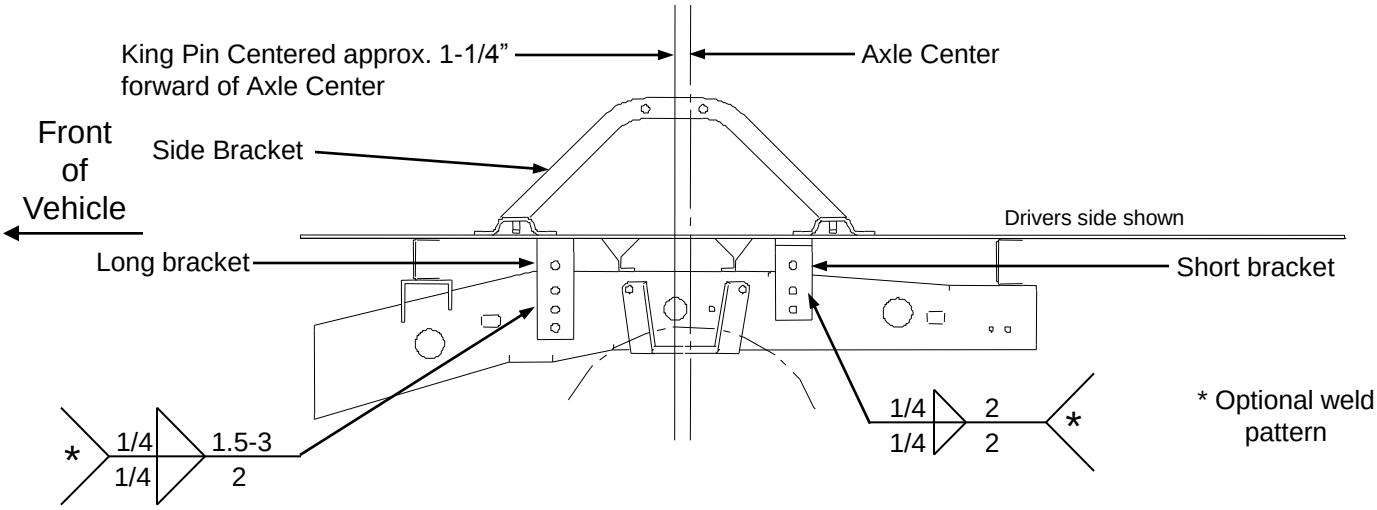

⚠ CAUTION! ⚠

Check for obstructions before drilling. Failure to do so could result in damaged fuel or brake lines, structural members, etc. CEQUENT PERFORMANCE PRODUCTS, INC. does its best to communicate tow vehicle manufacturer changes; however, it is ultimately the responsibility of the installer to prevent damage due to installation.

2007 And Newer Toyota Tundra 6.5' & 8' Beds – requires Service Kit 58309
(Crewmax 5.5' Bed requires Reese Sidewinder™ Pinbox)

⚠ CAUTION! ⚠

Read pages 2-3 of these instructions before starting installation. Failure to do so could result in significant vehicle damage!

IMPORTANT NOTES FOR THIS INSTALLATION:

1. Use the 58309 service kit together with the 30035 mounting kit. Read p. 1-3 of the 30035 instruction for general information.
2. The mounting holes for Row 3 go through the inside of the bed sill. After measuring, drill an 1/8" hole for the rear rail. Be sure the hole is in the center of the bed sill. Make sure it lines up correctly. Drill a 9/16" hole through the bed and the top of the frame on both sides. For the Row 4 passenger side attachment, drill through the bed and the top of the frame as well.
3. The rear rail on the passenger side is secured directly to the frame with 3" carriage bolts provided in the 58309 kit. For the Row 3 attachment, a tube spacer should be placed inside the bed sill on top of the frame and under the bottom of the bed. Line up the spacer with the drilled hole before inserting the carriage bolt. Repeat for both sides. See **Detail Inside Frame.**

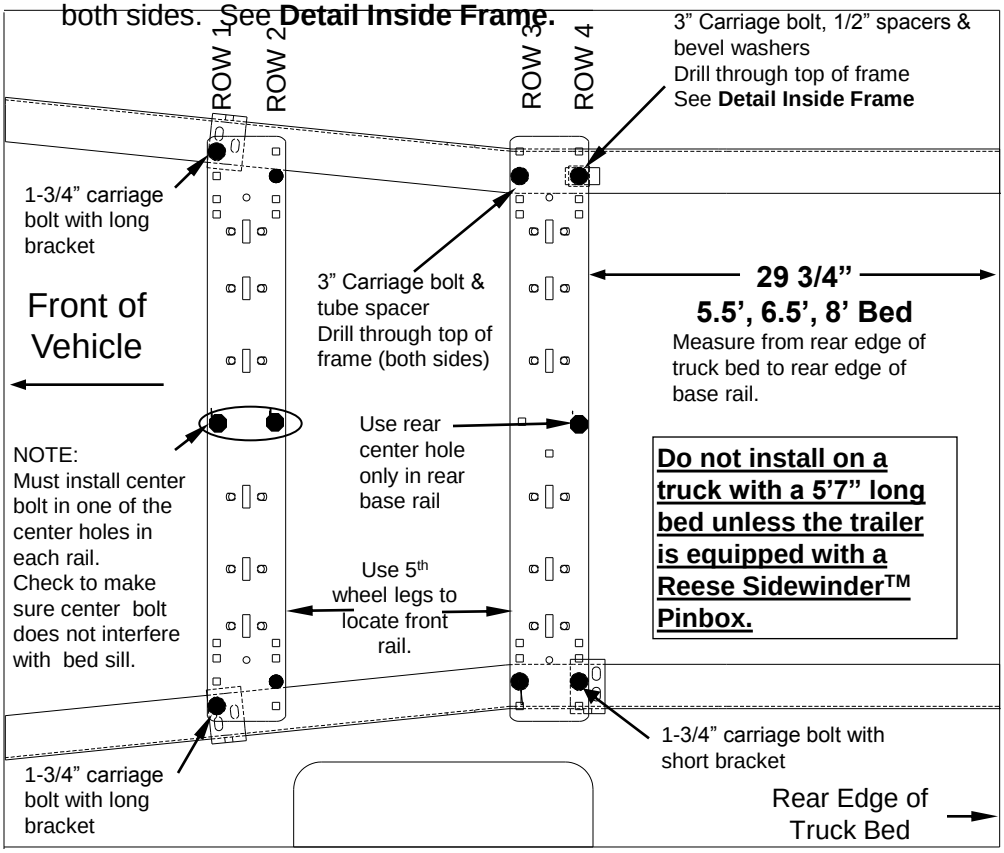

Rear Passenger Side
Detail Inside Frame

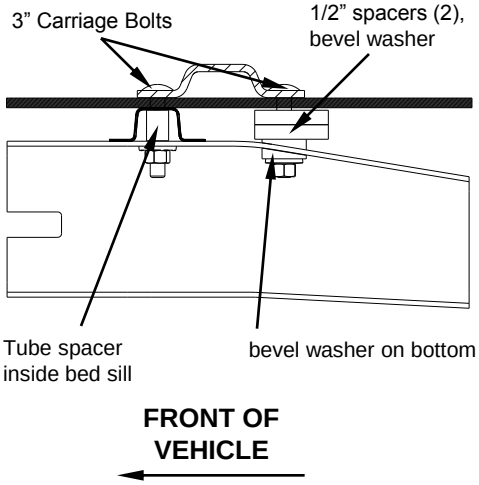

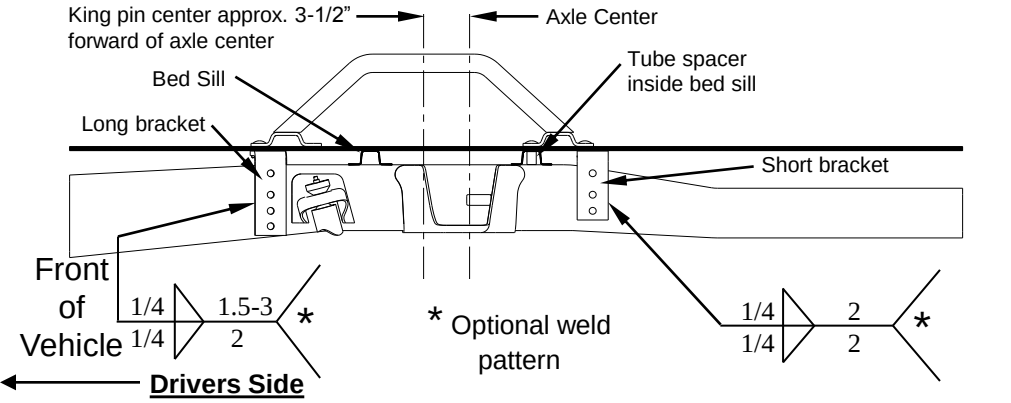

4. For the Row 4 passenger side attachment, stack two 1/2" spacers and a bevel washer, provided in the 58309 kit, to fill the gap between the bed and the frame. Use another bevel washer, conical toothed washer, and hex nut to fasten the 3" carriage bolt in place. See above drawing.
5. Install the long brackets on the front rail and the short bracket on the rear rail driver side using the 1-3/4" carriage bolts provided in the 58309 kit. All other attachments to the bed use 2" carriage bolts from the 30035 kit.

⚠ CAUTION! ⚠

Check for obstructions before drilling. Failure to do so could result in damaged fuel or brake lines, structural members, etc. CEQUENT PERFORMANCE PRODUCTS, INC. does its best to communicate tow vehicle manufacturer changes; however, it is ultimately the responsibility of the installer to prevent damage due to installation.

© 2006,2007,2008,2009,2010,2011,2012,2013, 2014 Cequent Performance Products, Inc.
Made in China

NOTES

10 YEAR LIMITED WARRANTY

CEQUENT PERFORMACE PRODUCTS, INC. warrants its Fifth Wheel Hitch Mounting Kits from date of purchase against defects in material and workmanship under normal use and service, ordinary wear and tear excepted, for 10 years of ownership to the original consumer purchaser when a CEQUENT PERFORMACE PRODUCTS, INC. mounting kit is used.

CEQUENT PERFORMACE PRODUCTS, INC. will replace FREE OF CHARGE any part which proves defective in material or workmanship when presented to any CEQUENT PERFORMACE PRODUCTS, INC. dealer, CEQUENT PERFORMACE PRODUCTS, INC. Warehouse or returned to factory. TRANSPORTATION CHARGES PREPAID, at the address below. THIS WARRANTY IS LIMITED TO DEFECTIVE PARTS REPLACEMENT ONLY. LABOR CHARGES AND/OR DAMAGE INCURRED IN INSTALLATION OR REPLACEMENT AS WELL AS INCIDENTAL AND CONSEQUENTIAL DAMAGES CONNECTED THEREWITH ARE EXCLUDED.

Some states do not allow the exclusion or limitation of incidental or consequential damages, so the above limitation or exclusion may not apply to you.

Any damage to the Fifth Wheel Hitch as a result of misuse, abuse, neglect, accident, improper installation, or any use violative of instructions furnished by us, WILL VOID THE WARRANTY.

This warranty gives you specific legal rights, and you may also have other rights which vary from state to state. In the event of a problem with warranty service or performance, you may be able to go to a small claims court, or a federal district court.

Cequent Performance Products, Inc.
47912 Halyard Dr. Suite 100
Plymouth, MI. 48170